thermoscientific

# Thermo Scientific A27 - 6 x 50 Rotor

for Sorvall LYNX Superspeed Centrifuges

**Instruction Manual**

50138015-c • 07 / 2022

Visit us online to register your warranty:
**thermofisher.com/labwarranty**

ThermoFisher SCIENTIFIC

# WEEE Conformity

This product is subject to the regulations of the EU Waste Electrical & Electronic Equipment (WEEE) Directive 2012/19/EU. It is marked by the following symbol:

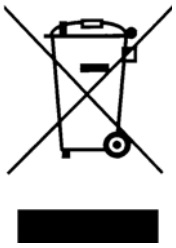

Health Protection Agency
Microbiology Services
Porton Down
Salisbury
Wiltshire
SP4 0JG

# Certificate of Containment Testing

## Containment Testing of Rotor A27-6x50 in a Thermo Scientific Centrifuge

**Report No. 170-12 D**

**Report Prepared For:** Thermo Fisher Scientific
**Issue Date:** 10th October 2012

### Test Summary

An A27-6x50 rotor was containment tested in a Thermo Scientific centrifuge at 27,000 rpm at partial vacuum, using Annex AA of IEC 1010-2-20:2006 (2nd Ed.). The sealed rotor was shown to contain all contents.

| Report Written By | Report Authorised By |
|---|---|
| Name: Ms Susan Macken | Name: Mrs Sara Speight |
| Title: Biosafety Scientist | Title: Senior Biosafety Scientist |

Thermo Scientific is a trademark of Thermo Fisher Scientific and is registered with the USPTO.

# Table of Contents

**Preface** ..... ii
**Scope of Supply** ..... ii
**Precautions** ..... iii

**Chapter 1 Rotor Information** ..... 1
Rotor Data ..... 1
Rotor Package ..... 2
Rotor Accessory ..... 2
Information on Tubes and Bottles ..... 2

**Chapter 2 Thermo Scientific Auto-Lock Rotor Exchange** ..... 5
Open and Close Rotor ..... 5
Rotor Installation ..... 5
Removing the Rotor ..... 6

**Chapter 3 Rotor Loading** ..... 9
Before a Run ..... 9
Proper Loading ..... 9
Improper Loading ..... 10
Maximum Loading ..... 10
Lifetime ..... 10

**Chapter 4 Aerosol-tight Applications** ..... 11
Basic Principles ..... 11
Fill Level ..... 11
Checking the Aerosol-Tightness ..... 11

**Chapter 5 Maintenance and Care** ..... 13
Cleaning Intervals ..... 13
Cleaning ..... 13
Maintenance of O-Rings in Rotor Lid ..... 15
Disinfection ..... 16
Decontamination ..... 17
Autoclaving ..... 18
Service of Thermo Fisher Scientific ..... 18
Shipping and Deposing of Centrifuge and Accessories ..... 19

**RCF-Values** ..... 21
**Rotor Care Guide** ..... 29
Routine Evaluation and Care of Your Rotor ..... 30
Rotor Maintenance ..... 31

**Chemical Compatibility Chart** ..... 35

# Preface

Before starting to use the rotor, read through this instruction manual carefully and follow the instructions.

The information contained in this instruction manual is the property of Thermo Fisher Scientific; it is forbidden to copy or pass on this information without explicit approval.

Failure to follow the instructions and safety information in this instruction manual will result in the expiration of the sellers warranty.

# Scope of Supply

| Article Number | | Quantity | Check |
|---|---|---|---|
| 75003007 | A27-6x50 Rotor | 1 | ☐ |
| 75003786 | Grease for Threads | 1 | ☐ |
| 76003500 | Vacuum Grease | 1 | ☐ |
| 75007006 | Replacement O-Rings | 1 | ☐ |
| 65614 | Retaining Ring Pliers | 1 | ☐ |
| 50136234 | CD with Manual | 1 | ☐ |

If any parts are missing, please contact your nearest Thermo Fisher Scientific representative.

This symbol refers to general hazards.
**CAUTION** means that material damage could occur.
**WARNING** means that injuries or material damage or contamination could occur.

This symbol refers to biological hazards.
Observe the information contained in the instruction manual to keep yourself and your environment safe.

This symbol means that the rotor and centrifuge manual contain additional important information.
Observe the information contained in the instruction manual to keep yourself and your environment safe.

# Precautions

**WARNING**

In order to ensure safe operation of the A27-6x50 rotor, the following general safety regulations must be followed:

- Do not remove the magnet at the rotor bottom.
- Do not use rotors which show any signs of corrosion and/or cracks.
- Use only with rotors which have been loaded properly.
- Never overload the rotor.
- Use only accessories which have been approved by Thermo Fisher Scientific. Exceptions to this rule are commercially available glass or plastic centrifuge tubes, provided they have been approved for the speed or the RCF value of the rotor.
- Please observe the safety instructions.

Please pay particular attention to the following aspects:

- The rotor may be carried by the lid handle if the lid is properly tightened.
- Rotor installation: Check that the rotor is locked properly into place before operating the centrifuge.
- Always balance the samples.

Maximum sample density at maximum speed: $1.2 \frac{g}{cm^3}$

# Rotor Information

**Contents**


- "Rotor Data" on page 1
- "Rotor Package" on page 2
- "Rotor Accessory" on page 2
- "Information on Tubes and Bottles" on page 2


## Rotor Data

| Centrifuge | Sorvall Lynx 6000 | Sorvall Lynx 4000 |
|---|---|---|
| Weight of empty Rotor [kg] | 5.6 | 5.6 |
| Max. Cycle Number | 50000 | 50000 |
| Maximum permissible Load [ g ] | 6x75 | 6x75 |
| Maximum Speed $n_{max}$ [ rpm ] | 27000 | 24000 |
| Maximum RCF-Value at $n_{max}$ | 79057 | 62465 |
| K-Value at $n_{max}$ | 485 | 485 |
| Radius max. / min. [ cm ] | 9.7 / 2.4 | 9.7 / 2.4 |
| Angle [ ° ] | 34 | 34 |
| Maximum Speed at 4 °C [s] | 25500 | 23500 |
| Sample Cooling at $n_{max}$ [°C] (Ambient Temperature of 23 °C, Run Time 60 Minutes) | 9 | 6 |
| Aerosol-tight* | Yes | Yes |
| Maximum Autoclave Temperature (°C) | 121 | 121 |

* Tested and approved by HPA, Porton-Down, UK

# Rotor Package

| Description | Article Number |
|---|---|
| A27-6x50 Rotor | 75003007 |
| 50 mL Nalgene™ PPCO Oak Ridge Tube with Sealing Cap (qty. 6) | 3139-0050 |
| Grease for Threads | 75003786 |
| Anti-corrosion Oil | 70009824 |
| Replacement O-Rings with Vacuum Grease | 75007006 |
| Retaining Ring Pliers | 65614 |
| CD with Manual | 50136234 |

# Rotor Accessory

| Description | Article Number |
|---|---|
| Ultracrimp Sealing Tool and Crimp Gauge | 03920 |
| Ultracrimp Gauge Replacement | 03919 |
| Ultracrimp Extra Plugs and Caps | 03999 |
| Rotor Cap | 03538 |
| Rotor Stand | 75003711 |

# Information on Tubes and Bottles

| Description | Article Number | Type | Article Number | Description |
|---|---|---|---|---|
| PA Ultracrimp Tube | 03528 | Closure | Included | Plugs and Aluminum Caps |
| | | Accessory | 03538 | Rotor Cap |
| | | Accessory | 03529 | Tube Racks |
| | | Accessory | 03920 | Sealing Tool |
| Nalgene PC Oak Ridge Tube | 3138-0050 | Closure | Included | PP Sealing |
| Nalgene PPCO Oak Ridge Tube | 3139-0050 | Closure | Included | PP Sealing |
| FEP Oak Ridge Tube | 3114-0050 | Closure | Included | FEP Screw Top |
| PP Flanged Tube | 03147 | Closure | 03268 | PP Snap-On |
| PC Flanged Tube | 03146 | Closure | 03268 | PP Snap-On |
| PA Flanged Tube | 03139 | – | – | – |

| Description | Article Number | Type | Article Number | Description |
|---|---|---|---|---|
| PC Oak Ridge Tube | 314348 | Closure | 314347 | Aluminum Sealing |
| | | Adapter | 75003027 | 1 Place/Adapter |
| | | Tool | 314353 | Tube Extractor Tool |
| PP Oak Ridge Tube | 314349 | Closure | 314347 | Aluminum Sealing |
| | | Adapter | 75003027 | 1 Place/Adapter |
| | | Tool | 314353 | Tube Extractor Tool |
| Glass Tube | - | Adapter | 00368 | Optional Caps |
| Nalgene PC Oak Ridge Tube | 3138-0016 | Closure | Included | PA Sealing |
| | | Adapter | 75003026 | 1 Place/Adapter |
| Nalgene PP Oak Ridge Tube | 3139-0016 | Closure | Included | PA Sealing |
| | | Adapter | 75003026 | 1 Place/Adapter |
| PP Flanged Tube | 03244 | Closure | 03299 | PP Snap-On |
| | | Adapter | 75003026 | 1 place/Adapter |
| PC Flanged Tube | 03243 | Closure | 03269 | PP Snap-On |
| | | Adapter | 75003026 | 1 place/Adapter |
| Glass Tube | – | Adapter | 00363 | 1 Place/Adapter |
| PP Flanged Tube | 03116 | Closure | 03266 | PP Nonsealing |
| | | Adapter | 75003028 | 1 Place/Adapter |
| PC Flanged Tube | 03115 | Closure | 03266 | PP Nonsealing |
| | | Adapter | 75003028 | 1 Place/Adapter |
| Nalgene PP Oak Ridge Tube | 3139-0010 | Closure | Included | PA Sealing |
| | | Adapter | 75003024 | 1 Place/Adapter |
| PP Oak Ridge Tube* | 03929 | Closure | 03279 | PP Sealing |
| | | Adapter | 75003024 | 1 Place/Adapter |
| PC Oak Ridge Tube | 03020 | Closure | 03279 | PP Sealing |
| | | Adapter | 75003024 | 1 Place/Adapter |
| Nalgene PC Oak Ridge Tube | 3138-0010 | Closure | Included | PA Sealing |
| | | Adapter | 75003024 | 1 Place/Adapter |
| PC Flanged Tube | 03120 | Closure | 03265 | PP Snap-On |
| | | Adapter | 00473 | 2 Places/Adapter |
| PP Flanged Tube | 03121 | Closure | 03265 | PP Snap-On |
| | | Adapter | 00473 | 2 Places/Adapter |
| PP Flanged Tube | 03105 | Closure | 03264 | PP Snap-On |
| | | Adapter | 75003023 | 2 Places/Adapter |

| Description | Article Number | Type | Article Number | Description |
|---|---|---|---|---|
| PC Flanged Tube | 03104 | Closure | 03264 | PP Snap-On |
| | | Adapter | 75003023 | 2 Places/Adapter |
| Conical Microtube | 314352H01 | Adapter | 75003029 | 2 Places/Adapter |

* Rated to 21,000 rpm when partially filled.

# Thermo Scientific Auto-Lock Rotor Exchange

**Contents**


- "Open and Close Rotor" on page 5
- "Rotor Installation" on page 5
- "Removing the Rotor" on page 6


## Open and Close Rotor

1. To tighten the lid,  twist the lid handle clockwise until "hand tight". As a general rule, once the lid is tightend to the point of resistance, tighten an additional 1/4 turn.
2. To remove the lid, twist the lid handle counter clockwise until the lid can be removed from the rotor.

**Note** The rotor may be carried by the lid handle if the lid is properly tightened.

## Rotor Installation

**CAUTION** Unapproved or incorrectly combined accessories can cause serious damage to the centrifuge.

This rotor is equipped with Thermo Scientific Auto-Lock rotor exchange.

This system is used to automatically lock the rotor to the centrifuge spindle, eliminating the need to manually bolt the rotor to the centrifuge spindle.

Proceed as follows:

1. Open the door of the centrifuge and if necessary remove any dust, foreign objects or residue from the chamber.

Auto-Lock and o-ring must be clean and undamaged.

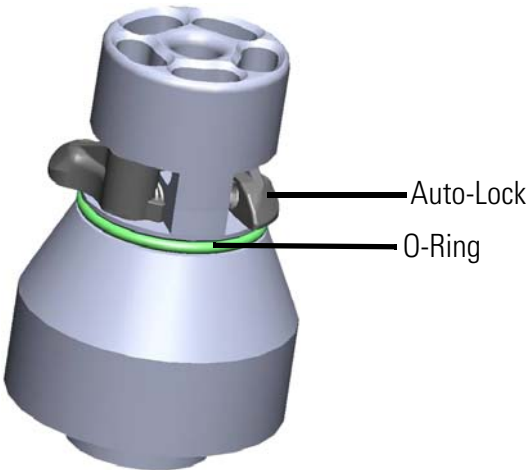


**Figure 2-1.** Auto-Lock

2. Place the rotor over the centrifuge spindle and let it slide slowly down the centrifuge spindle. The rotor clicks automatically into place.

**CAUTION** Do not force the rotor onto the centrifuge spindle.
If the rotor is very light, then it may be necessary to press it onto the centrifuge spindle with a bit of pressure.

3. Check if the rotor is properly installed by lifting it slightly on the handle. If the rotor has not been locked, place the rotor over the centrifuge spindle again.

**WARNING** If the rotor cannot be properly locked in place after several attempts, then the Auto-Lock may be damaged and you are not permitted to operate the rotor.
Check for any damage to the rotor: Damaged rotors must not be used.
Keep the centrifuge spindle area of the rotor clear of objects.
Operate the rotor always with the lid closed.

**CAUTION** Check that the rotor is properly locked on the centrifuge spindle before each use by pulling it at its handle.

**CAUTION** Be sure to check all sealings before starting any aerosol-tight applications.

4. Close the centrifuge door.

# Removing the Rotor

To remove the rotor, proceed as follows:

1. Open the centrifuge door.
2. Grab the rotor handle with one or both hands and push down on against the Auto-Lock button. At the same time, pull the rotor directly upwards and remove it from the centrifuge spindle. Make sure not to tilt the rotor while doing this.

**Note** The rotor lid must be properly tightened to the rotor body in order to remove the rotor from the centrifuge.

# Rotor Loading

**Contents**


- "Before a Run" on page 9
- "Proper Loading" on page 9
- "Improper Loading" on page 10
- "Maximum Loading" on page 10
- "Lifetime" on page 10


## Before a Run

1. Please read and observe the safety instructions contained in these operating instructions and in the instructions for use.
2. Check the rotor and all accessory parts for damages such as cracks, scratches or traces of corrosion.
3. Check the rotor chamber, the centrifuge spindle and the Auto-Lock of the rotor.
4. Check the rotor's suitability using the chemical compatibility chart on on page-35.

## Proper Loading

**Note** You can also fully load the rotor. It is very important that the tubes are balanced against each other.

# Improper Loading

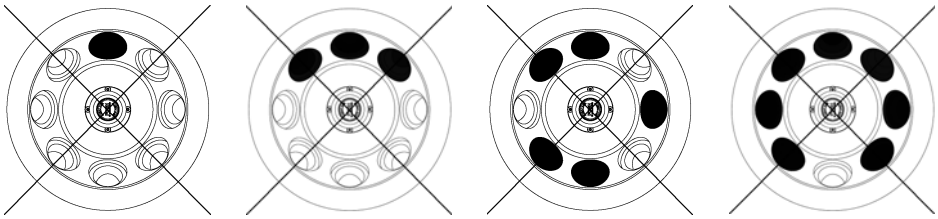

# Maximum Loading

The rotor can run at high speeds. The rotor design has sufficient reserve stability even when spinning at top speed.

The safety system of the centrifuge requires that you do not overload the rotor.

There are two options available for centrifuging samples whose weight, including adapter, exceeds the maximum permissible load:

- Reduce the fill level.
- Reduce the speed.
- Calculate the maximum speed with this formula and set the centrifuge at the calculated maximum speed:

$$n_{per} = n_{max}\sqrt{\frac{\text{maximum permissible load}}{\text{actual load}}}$$

$n_{per}$ = Permissible Speed

$n_{max}$ = Maximum Speed

# Lifetime

The lifetime of rotors and buckets is dependent on the amount of mechanical load. Do not exceed the number of cycles recommended for rotors and buckets.

The maximum number of cycles for the rotor is given in the rotor table in section "Rotor Data" on page 1.
The maximum number of cycles for buckets is marked on the buckets themselves.

**WARNING** Replace the rotor when the specified number of cycles is reached. Due to the mechanical load a rotor can break and thus damage the centrifuge.

### Service Life Examples

| Usage profile | Maximum lifetime at 50,000 cycles |
|---|---|
| 25 runs / day<br>200 days / year | 10 years |

# Aerosol-tight Applications

**Contents**


- "Basic Principles" on page 11
- "Fill Level" on page 11
- "Checking the Aerosol-Tightness" on page 11


## Basic Principles

**CAUTION** Aerosol-tight rotors and tubes may only be opened in an approved safety work-bench when centrifuging dangerous samples.
Mind the maximum permissible load.

**CAUTION** Be sure to check all sealings before starting any aerosol-tight applications.

- Check that the sample containers are well suited for the desired centrifugation process.

## Fill Level

Open top tubes are only to be filled to a level which ensures that the sample is unable to reach the top of the tube during centrifugation. Therefore fill the tube only 2/3 of the rated level.

## Checking the Aerosol-Tightness

The aerosol tightness testing of the rotors and buckets depend on the microbiological test process in accordance with the EN 61010-2-020 Appendix AA.

Whether or not a rotor is aerosol-tight depends primarily on proper handling.

Check as needed to make sure your rotor is aerosol-tight.

The careful inspection of the seals and seal surfaces for signs of wear and damage such as cracks, scratches and embrittlement is extremely important.

Aerosol-tight applications are not possible if the rotor is run without the lid.

Aerosol-tightness requires the correct operation when filling the sample vessels and closing the rotor lid.

## Quick Test

As a quick test, it is possible to test the aerosol-tightness of fixed-angle rotors using the following process:

1. Lubricate all seals lightly.
   Always use the special grease 76003500 when lubricating the seals.
2. Fill the cavities with approx. 10 ml of carbonated mineral water.
3. Close the rotor as explained in the handling instructions.
4. Shake the rotor vigorously using your hands.
   This releases the carbonic acid gas which is bound in the water, resulting in excess pressure. Do not apply pressure to the lid when doing so.

   Leaks can be detected by escaping water or the sound of escaping gas.

   Replace the seals if you detect any leaks. Then repeat the test.
5. Dry the rotor, rotor lid and the cover seal.

**CAUTION** Prior to each use, the seals in the rotor are to be inspected in order to assure that they are correctly seated and are not worn or damaged.

# Maintenance and Care

**Contents**


- "Cleaning Intervals" on page 13
- "Cleaning" on page 13
- "Disinfection" on page 16
- "Decontamination" on page 17
- "Autoclaving" on page 18
- "Service of Thermo Fisher Scientific" on page 18


## Cleaning Intervals

For the sake of personal, environmental, and material protection, it is your duty to clean and if necessary disinfect the rotor on a regular basis.

| Maintenance | Recommended interval |
|---|---|
| Clean Rotor Chamber | Daily or when soiled |
| Clean Rotor | Daily or when soiled |
| Accessories | Daily or when soiled |

**CAUTION** Refrain from using any other cleaning or decontamination procedure than those recommended here, if you are not entirely sure that the intended procedure is safe for the equipment.
Use only approved cleansers.
If in doubt, contact Thermo Fisher Scientific.

## Cleaning

Clean rotor and accessories as follows:

- Use warm water with a neutral solvent.
- Never use caustic cleaning agents such as soap suds, phosphoric acid, bleaching solutions or scrubbing powder.

- Rinse the cavities out thoroughly.
- Use a soft brush without metal bristles to remove stubborn residue.
- Afterwards rinse with distilled water.
- Place the rotors on a plastic grate with their cavities pointing down.
- If drying boxes are used, the temperature must never exceed 50 °C, since higher temperatures could damage the material and shorten the lifetime of the parts.
- Use only disinfectants with a pH of 6-8.
- Dry aluminum parts off with a soft cloth.
- After cleaning, treat the entire surface of aluminum parts with corrosion protection oil (70009824). Also treat the rotor cavities with oil.
- Store the aluminum parts at room temperature or in a cold-storage room with the cavities pointing down.

**CAUTION** Before using any cleaning or decontamination methods except those recommended by the manufacturer, users should check with the manufacturer that the proposed method will not damage the equipment.

Clean rotor and accessories as follows:

1. Open the centrifuge.
2. Turn off the centrifuge.
3. Release the rotor.
4. Grasp the rotor with both hands and lift it vertically off the centrifuge spindle.
5. Remove the centrifuge tubes and adapters.
6. Use a neutral cleaning agent with a pH value between 6 and 8 for cleaning.
7. Dry all of the rotors and accessories after cleaning with a cloth or in a warm air cabinet at a maximum temperature of 50 °C.
8. Store the rotor with its lid open.

- After cleaning, treat the entire surface of aluminum parts with corrosion protection oil (70009824). Also treat the rotor cavities with oil.
- Grease the seal (76003500).
- Grease the thread in the lid (75003786).

**CAUTION** When cleaning, do not allow liquids, especially organic solvents, to get on the drive shaft or the bearings of the centrifuge.
Organic solvents break down the grease in the motor bearing. The drive shaft could freeze up.

# Maintenance of O-Rings in Rotor Lid

**Note** Check the O-ring when the rotor leaks and when autoclaving.

In order to maintain the O-rings (red in the drawings) you have to disassemble the rotor lid.

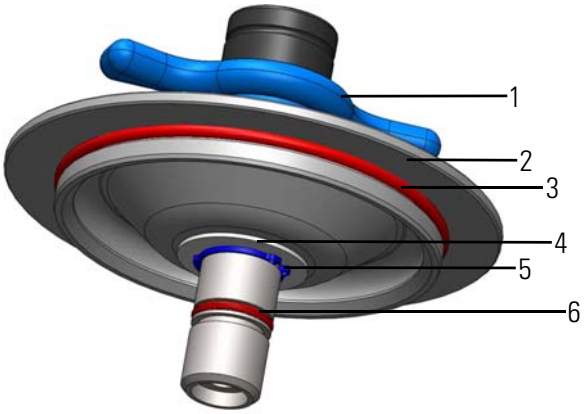


In order to reach O-rings you need a retaining ring plier (65614, shipped with rotor).

1. Hold the rotor lid with the lid knob (1) in your palm and the thread pointing upwards.
2. Insert the retaining ring plier (65614) in the eyes of the retaining ring (5).
3. Close the retaining ring plier (65614) and lift the retaining ring over the thread.

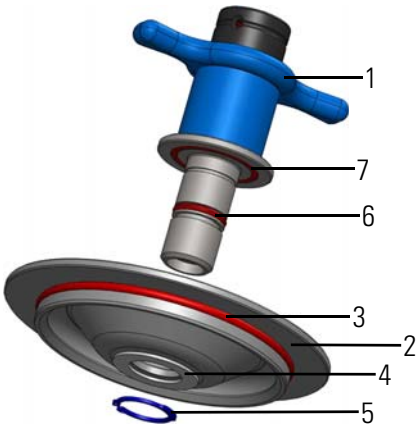


4. In order to remove the O-ring (6) in the threads push the O-ring on two opposing side so it will form a loop, which you then can use to remove the O-ring.

**Note** You can insert a paper-clip to the loop to lift the O-ring over the thread.

**CAUTION** Do not use any sharp items to remove the O-ring from the groove.

5. Control all the O-rings.

**CAUTION** O-rings that show signs of wear must be replaced.

6. Grease all the O-rings before inserting them again using the vacuum grease (76003500).
7. Place the O-rings back into their grooves.
   Use the staple again for O-ring (6).
8. Mount the rotor lid in reverse order.
9. Place the rotor plate (2) onto the thread.
10. Place the washer (4) onto the thread.
11. Hold the retaining ring (5) with the retaining ring plier (65614).
12. Open the retaining ring (5) and place it onto the thread until it has contact with the rotor plate (2).

# Disinfection

Disinfect the centrifuge immediately whenever infectious material has spilled during centrifugation.

**WARNING** Infectious material can get into the centrifuge when a tube breaks or as a result of spills. Keep in mind the risk of infection when touching the rotor and take all necessary precautions.
In case of contamination, make sure that others are not put at risk.
Decontaminate the affected parts immediately.
Take other precautions if need be.

The rotor chamber and the rotor should be treated preferably with a neutral disinfectant.

**CAUTION** Before using any cleaning or decontamination methods except those recommended by the manufacturer, users should check with the manufacturer that the proposed method will not damage the equipment.
Observe the safety precautions and handling instructions for the cleaning agents used.

Contact the Service Department of Thermo Fisher Scientific for questions regarding the use of other disinfectants.

Disinfect the rotor and accessories as follows:

1. Open the centrifuge.
2. Turn off the centrifuge.
3. Release the rotor.
4. Grasp the rotor with both hands and lift it vertically off the centrifuge spindle.
5. Remove the centrifuge tubes and adapters and dispose of them or disinfect them.

6. Treat the rotor and accessories according to the instructions for the disinfectant. Adhere strictly to the given application times.
7. Be sure the disinfectant can drain off the rotor.
8. Rinse the rotor and accessories thoroughly with water.
9. Dispose of the disinfectant according to the applicable guidelines.
10. Dry all of the rotors and accessories after cleaning with a cloth or in a warm air cabinet at a maximum temperature of 50 °C.
11. Store the rotor with its lid open.
    - After cleaning, treat the entire surface of aluminum parts with corrosion protection oil (70009824). Also treat the rotor cavities with oil.
    - Grease the seal (76003500).
    - Grease the thread in the lid (75003786).

# Decontamination

Decontaminate the centrifuge immediately whenever radioactive material has spilled during centrifugation.

**WARNING** Radioactive material can get into the centrifuge when a tube breaks or as a result of spills. Keep in mind the risk of infection when touching the rotor and take all necessary precautions.
In case of contamination, make sure that others are not put at risk.
Decontaminate the affected parts immediately.
Take other precautions if need be.

**CAUTION** Before using any cleaning or decontamination methods except those recommended by the manufacturer, users should check with the manufacturer that the proposed method will not damage the equipment.

For general radioactive decontamination use a solution of equal parts of 70 % ethanol, 10 % SDS and water.

1. Open the centrifuge.
2. Turn off the centrifuge.
3. Release the rotor.
4. Grasp the rotor with both hands and lift it vertically off the centrifuge spindle.
5. Remove the centrifuge tubes and adapters and dispose of them or disinfect them.
6. Rinse the rotor first with ethanol and then with de-ionized water.
    - Adhere strictly to the given application times.
7. Be sure the decontamination solution can drain off the rotor.
8. Rinse the rotor and accessories thoroughly with water.

9. Dispose of the decontamination solution according to the applicable guidelines.
10. Dry all of the rotors and accessories after cleaning with a cloth or in a warm air cabinet at a maximum temperature of 50 °C.
11. Store the rotor with its lid open.
    - After cleaning, treat the entire surface of aluminum parts with corrosion protection oil (70009824). Also treat the rotor cavities with oil.
    - Grease the seal (76003500).
    - Grease the thread in the lid (75003786).

# Autoclaving

1. Before autoclaving clean rotor and accessories as described above.
2. Place the rotor on a flat surface.

- Rotors and adapter can be autoclaved at 121 °C.
- The maximum permissible autoclave cycle is 20 minutes at 121 °C.

**Note** No chemical additives are permitted in the steam.

**CAUTION** Never exceed the permitted temperature and duration when autoclaving.
If the rotor shows signs of corrosion or wear, it must be replaced.

# Service of Thermo Fisher Scientific

Thermo Fisher Scientific recommends having the centrifuge and accessories serviced once a year by an authorized service technician. The service technician checks the following

- the electrical equipment;
- the suitability of the set-up site;
- the lid lock and the safety system;
- the rotor;
- the fixation of the rotor and the drive shaft.

Thermo Fisher Scientific offers inspection and service contracts for this work. Any necessary repairs are performed for free during the warranty period and afterwards for a charge.
This is only valid if the centrifuge has only been maintained by a Thermo Fisher Scientific service technician.

# Shipping and Deposing of Centrifuge and Accessories

Contact the Thermo Scientific customer service before returning anything. You will receive a RMA that must be used for the shipping. When you have questions regarding the deposing the customer service will help you as well. The contact information can be found on back page.

**WARNING** Before shipping or deposing centrifuges and accessories you have ton clean and if necessary disinfect or decontaminate everything. Before storing the centrifuge and the accessories it must be cleaned and if necessary disinfected and decontaminated.

# RCF-Values

| Speed rpm | $R_{min}$ | $R_{max}$ | RCF $R_{min}$ | RCF $R_{max}$ |
|---|---|---|---|---|
| 500 | 2.4 | 9.7 | 7 | 27 |
| 600 | 2.4 | 9.7 | 10 | 39 |
| 700 | 2.4 | 9.7 | 13 | 53 |
| 800 | 2.4 | 9.7 | 17 | 69 |
| 900 | 2.4 | 9.7 | 22 | 88 |
| 1000 | 2.4 | 9.7 | 27 | 108 |
| 1100 | 2.4 | 9.7 | 32 | 131 |
| 1200 | 2.4 | 9.7 | 39 | 156 |
| 1300 | 2.4 | 9.7 | 45 | 183 |
| 1400 | 2.4 | 9.7 | 53 | 213 |
| 1500 | 2.4 | 9.7 | 60 | 244 |
| 1600 | 2.4 | 9.7 | 69 | 278 |
| 1700 | 2.4 | 9.7 | 78 | 313 |
| 1800 | 2.4 | 9.7 | 87 | 351 |
| 1900 | 2.4 | 9.7 | 97 | 391 |
| 2000 | 2.4 | 9.7 | 107 | 434 |
| 2100 | 2.4 | 9.7 | 118 | 478 |
| 2200 | 2.4 | 9.7 | 130 | 525 |
| 2300 | 2.4 | 9.7 | 142 | 574 |
| 2400 | 2.4 | 9.7 | 155 | 625 |
| 2500 | 2.4 | 9.7 | 168 | 678 |
| 2600 | 2.4 | 9.7 | 181 | 733 |
| 2700 | 2.4 | 9.7 | 196 | 791 |
| 2800 | 2.4 | 9.7 | 210 | 850 |
| 2900 | 2.4 | 9.7 | 226 | 912 |
| 3000 | 2.4 | 9.7 | 241 | 976 |
| 3100 | 2.4 | 9.7 | 258 | 1042 |
| 3200 | 2.4 | 9.7 | 275 | 1110 |

| Speed rpm | $R_{min}$ | $R_{max}$ | RCF $R_{min}$ | RCF $R_{max}$ |
|---|---|---|---|---|
| 3300 | 2.4 | 9.7 | 292 | 1181 |
| 3400 | 2.4 | 9.7 | 310 | 1254 |
| 3500 | 2.4 | 9.7 | 329 | 1328 |
| 3600 | 2.4 | 9.7 | 348 | 1405 |
| 3700 | 2.4 | 9.7 | 367 | 1485 |
| 3800 | 2.4 | 9.7 | 387 | 1566 |
| 3900 | 2.4 | 9.7 | 408 | 1649 |
| 4000 | 2.4 | 9.7 | 429 | 1735 |
| 4100 | 2.4 | 9.7 | 451 | 1823 |
| 4200 | 2.4 | 9.7 | 473 | 1913 |
| 4300 | 2.4 | 9.7 | 496 | 2005 |
| 4400 | 2.4 | 9.7 | 519 | 2100 |
| 4500 | 2.4 | 9.7 | 543 | 2196 |
| 4600 | 2.4 | 9.7 | 568 | 2295 |
| 4700 | 2.4 | 9.7 | 593 | 2396 |
| 4800 | 2.4 | 9.7 | 618 | 2499 |
| 4900 | 2.4 | 9.7 | 644 | 2604 |
| 5000 | 2.4 | 9.7 | 671 | 2711 |
| 5100 | 2.4 | 9.7 | 698 | 2821 |
| 5200 | 2.4 | 9.7 | 726 | 2932 |
| 5300 | 2.4 | 9.7 | 754 | 3046 |
| 5400 | 2.4 | 9.7 | 782 | 3162 |
| 5500 | 2.4 | 9.7 | 812 | 3280 |
| 5600 | 2.4 | 9.7 | 841 | 3401 |
| 5700 | 2.4 | 9.7 | 872 | 3523 |
| 5800 | 2.4 | 9.7 | 903 | 3648 |
| 5900 | 2.4 | 9.7 | 934 | 3775 |
| 6000 | 2.4 | 9.7 | 966 | 3904 |
| 6100 | 2.4 | 9.7 | 998 | 4035 |
| 6200 | 2.4 | 9.7 | 1031 | 4169 |
| 6300 | 2.4 | 9.7 | 1065 | 4304 |
| 6400 | 2.4 | 9.7 | 1099 | 4442 |
| 6500 | 2.4 | 9.7 | 1134 | 4582 |
| 6600 | 2.4 | 9.7 | 1169 | 4724 |
| 6700 | 2.4 | 9.7 | 1204 | 4868 |
| 6800 | 2.4 | 9.7 | 1241 | 5015 |
| 6900 | 2.4 | 9.7 | 1277 | 5163 |

| Speed rpm | $R_{min}$ | $R_{max}$ | RCF $R_{min}$ | RCF $R_{max}$ |
|---|---|---|---|---|
| 7000 | 2.4 | 9.7 | 1315 | 5314 |
| 7100 | 2.4 | 9.7 | 1353 | 5467 |
| 7200 | 2.4 | 9.7 | 1391 | 5622 |
| 7300 | 2.4 | 9.7 | 1430 | 5779 |
| 7400 | 2.4 | 9.7 | 1469 | 5939 |
| 7500 | 2.4 | 9.7 | 1509 | 6100 |
| 7600 | 2.4 | 9.7 | 1550 | 6264 |
| 7700 | 2.4 | 9.7 | 1591 | 6430 |
| 7800 | 2.4 | 9.7 | 1632 | 6598 |
| 7900 | 2.4 | 9.7 | 1675 | 6768 |
| 8000 | 2.4 | 9.7 | 1717 | 6941 |
| 8100 | 2.4 | 9.7 | 1760 | 7115 |
| 8200 | 2.4 | 9.7 | 1804 | 7292 |
| 8300 | 2.4 | 9.7 | 1848 | 7471 |
| 8400 | 2.4 | 9.7 | 1893 | 7652 |
| 8500 | 2.4 | 9.7 | 1939 | 7835 |
| 8600 | 2.4 | 9.7 | 1984 | 8021 |
| 8700 | 2.4 | 9.7 | 2031 | 8208 |
| 8800 | 2.4 | 9.7 | 2078 | 8398 |
| 8900 | 2.4 | 9.7 | 2125 | 8590 |
| 9000 | 2.4 | 9.7 | 2173 | 8784 |
| 9100 | 2.4 | 9.7 | 2222 | 8980 |
| 9200 | 2.4 | 9.7 | 2271 | 9179 |
| 9300 | 2.4 | 9.7 | 2321 | 9379 |
| 9400 | 2.4 | 9.7 | 2371 | 9582 |
| 9500 | 2.4 | 9.7 | 2422 | 9787 |
| 9600 | 2.4 | 9.7 | 2473 | 9994 |
| 9700 | 2.4 | 9.7 | 2525 | 10204 |
| 9800 | 2.4 | 9.7 | 2577 | 10415 |
| 9900 | 2.4 | 9.7 | 2630 | 10629 |
| 10000 | 2.4 | 9.7 | 2683 | 10845 |
| 10100 | 2.4 | 9.7 | 2737 | 11063 |
| 10200 | 2.4 | 9.7 | 2792 | 11283 |
| 10300 | 2.4 | 9.7 | 2847 | 11505 |
| 10400 | 2.4 | 9.7 | 2902 | 11730 |
| 10500 | 2.4 | 9.7 | 2958 | 11956 |
| 10600 | 2.4 | 9.7 | 3015 | 12185 |

| Speed rpm | $R_{min}$ | $R_{max}$ | RCF $R_{min}$ | RCF $R_{max}$ |
|---|---|---|---|---|
| 10700 | 2.4 | 9.7 | 3072 | 12416 |
| 10800 | 2.4 | 9.7 | 3130 | 12649 |
| 10900 | 2.4 | 9.7 | 3188 | 12884 |
| 11000 | 2.4 | 9.7 | 3247 | 13122 |
| 11100 | 2.4 | 9.7 | 3306 | 13362 |
| 11200 | 2.4 | 9.7 | 3366 | 13603 |
| 11300 | 2.4 | 9.7 | 3426 | 13847 |
| 11400 | 2.4 | 9.7 | 3487 | 14094 |
| 11500 | 2.4 | 9.7 | 3549 | 14342 |
| 11600 | 2.4 | 9.7 | 3611 | 14592 |
| 11700 | 2.4 | 9.7 | 3673 | 14845 |
| 11800 | 2.4 | 9.7 | 3736 | 15100 |
| 11900 | 2.4 | 9.7 | 3800 | 15357 |
| 12000 | 2.4 | 9.7 | 3864 | 15616 |
| 12100 | 2.4 | 9.7 | 3928 | 15878 |
| 12200 | 2.4 | 9.7 | 3994 | 16141 |
| 12300 | 2.4 | 9.7 | 4059 | 16407 |
| 12400 | 2.4 | 9.7 | 4126 | 16675 |
| 12500 | 2.4 | 9.7 | 4193 | 16945 |
| 12600 | 2.4 | 9.7 | 4260 | 17217 |
| 12700 | 2.4 | 9.7 | 4328 | 17491 |
| 12800 | 2.4 | 9.7 | 4396 | 17768 |
| 12900 | 2.4 | 9.7 | 4465 | 18046 |
| 13000 | 2.4 | 9.7 | 4535 | 18327 |
| 13100 | 2.4 | 9.7 | 4605 | 18610 |
| 13200 | 2.4 | 9.7 | 4675 | 18896 |
| 13300 | 2.4 | 9.7 | 4746 | 19183 |
| 13400 | 2.4 | 9.7 | 4818 | 19473 |
| 13500 | 2.4 | 9.7 | 4890 | 19764 |
| 13600 | 2.4 | 9.7 | 4963 | 20058 |
| 13700 | 2.4 | 9.7 | 5036 | 20354 |
| 13800 | 2.4 | 9.7 | 5110 | 20652 |
| 13900 | 2.4 | 9.7 | 5184 | 20953 |
| 14000 | 2.4 | 9.7 | 5259 | 21255 |
| 14100 | 2.4 | 9.7 | 5334 | 21560 |
| 14200 | 2.4 | 9.7 | 5410 | 21867 |
| 14300 | 2.4 | 9.7 | 5487 | 22176 |

| Speed rpm | $R_{min}$ | $R_{max}$ | RCF $R_{min}$ | RCF $R_{max}$ |
|---|---|---|---|---|
| 14400 | 2.4 | 9.7 | 5564 | 22487 |
| 14500 | 2.4 | 9.7 | 5641 | 22801 |
| 14600 | 2.4 | 9.7 | 5720 | 23116 |
| 14700 | 2.4 | 9.7 | 5798 | 23434 |
| 14800 | 2.4 | 9.7 | 5877 | 23754 |
| 14900 | 2.4 | 9.7 | 5957 | 24076 |
| 15000 | 2.4 | 9.7 | 6037 | 24400 |
| 15100 | 2.4 | 9.7 | 6118 | 24727 |
| 15200 | 2.4 | 9.7 | 6199 | 25055 |
| 15300 | 2.4 | 9.7 | 6281 | 25386 |
| 15400 | 2.4 | 9.7 | 6363 | 25719 |
| 15500 | 2.4 | 9.7 | 6446 | 26054 |
| 15600 | 2.4 | 9.7 | 6530 | 26391 |
| 15700 | 2.4 | 9.7 | 6614 | 26731 |
| 15800 | 2.4 | 9.7 | 6698 | 27072 |
| 15900 | 2.4 | 9.7 | 6783 | 27416 |
| 16000 | 2.4 | 9.7 | 6869 | 27762 |
| 16100 | 2.4 | 9.7 | 6955 | 28110 |
| 16200 | 2.4 | 9.7 | 7042 | 28461 |
| 16300 | 2.4 | 9.7 | 7129 | 28813 |
| 16400 | 2.4 | 9.7 | 7217 | 29168 |
| 16500 | 2.4 | 9.7 | 7305 | 29524 |
| 16600 | 2.4 | 9.7 | 7394 | 29883 |
| 16700 | 2.4 | 9.7 | 7483 | 30245 |
| 16800 | 2.4 | 9.7 | 7573 | 30608 |
| 16900 | 2.4 | 9.7 | 7663 | 30973 |
| 17000 | 2.4 | 9.7 | 7754 | 31341 |
| 17100 | 2.4 | 9.7 | 7846 | 31711 |
| 17200 | 2.4 | 9.7 | 7938 | 32083 |
| 17300 | 2.4 | 9.7 | 8031 | 32457 |
| 17400 | 2.4 | 9.7 | 8124 | 32833 |
| 17500 | 2.4 | 9.7 | 8217 | 33212 |
| 17600 | 2.4 | 9.7 | 8311 | 33592 |
| 17700 | 2.4 | 9.7 | 8406 | 33975 |
| 17800 | 2.4 | 9.7 | 8501 | 34360 |
| 17900 | 2.4 | 9.7 | 8597 | 34747 |
| 18000 | 2.4 | 9.7 | 8694 | 35137 |

| Speed rpm | $R_{min}$ | $R_{max}$ | RCF $R_{min}$ | RCF $R_{max}$ |
|---|---|---|---|---|
| 18100 | 2.4 | 9.7 | 8790 | 35528 |
| 18200 | 2.4 | 9.7 | 8888 | 35922 |
| 18300 | 2.4 | 9.7 | 8986 | 36317 |
| 18400 | 2.4 | 9.7 | 9084 | 36715 |
| 18500 | 2.4 | 9.7 | 9183 | 37116 |
| 18600 | 2.4 | 9.7 | 9283 | 37518 |
| 18700 | 2.4 | 9.7 | 9383 | 37922 |
| 18800 | 2.4 | 9.7 | 9484 | 38329 |
| 18900 | 2.4 | 9.7 | 9585 | 38738 |
| 19000 | 2.4 | 9.7 | 9686 | 39149 |
| 19100 | 2.4 | 9.7 | 9789 | 39562 |
| 19200 | 2.4 | 9.7 | 9891 | 39978 |
| 19300 | 2.4 | 9.7 | 9995 | 40395 |
| 19400 | 2.4 | 9.7 | 10098 | 40815 |
| 19500 | 2.4 | 9.7 | 10203 | 41237 |
| 19600 | 2.4 | 9.7 | 10308 | 41661 |
| 19700 | 2.4 | 9.7 | 10413 | 42087 |
| 19800 | 2.4 | 9.7 | 10519 | 42515 |
| 19900 | 2.4 | 9.7 | 10626 | 42946 |
| 20000 | 2.4 | 9.7 | 10733 | 43378 |
| 20100 | 2.4 | 9.7 | 10840 | 43813 |
| 20200 | 2.4 | 9.7 | 10949 | 44250 |
| 20300 | 2.4 | 9.7 | 11057 | 44690 |
| 20400 | 2.4 | 9.7 | 11166 | 45131 |
| 20500 | 2.4 | 9.7 | 11276 | 45574 |
| 20600 | 2.4 | 9.7 | 11386 | 46020 |
| 20700 | 2.4 | 9.7 | 11497 | 46468 |
| 20800 | 2.4 | 9.7 | 11609 | 46918 |
| 20900 | 2.4 | 9.7 | 11720 | 47370 |
| 21000 | 2.4 | 9.7 | 11833 | 47825 |
| 21100 | 2.4 | 9.7 | 11946 | 48281 |
| 21200 | 2.4 | 9.7 | 12059 | 48740 |
| 21300 | 2.4 | 9.7 | 12173 | 49201 |
| 21400 | 2.4 | 9.7 | 12288 | 49664 |
| 21500 | 2.4 | 9.7 | 12403 | 50129 |
| 21600 | 2.4 | 9.7 | 12519 | 50597 |
| 21700 | 2.4 | 9.7 | 12635 | 51066 |

| Speed rpm | $R_{min}$ | $R_{max}$ | RCF $R_{min}$ | RCF $R_{max}$ |
|---|---|---|---|---|
| 21800 | 2.4 | 9.7 | 12752 | 51538 |
| 21900 | 2.4 | 9.7 | 12869 | 52012 |
| 22000 | 2.4 | 9.7 | 12987 | 52488 |
| 22100 | 2.4 | 9.7 | 13105 | 52966 |
| 22200 | 2.4 | 9.7 | 13224 | 53447 |
| 22300 | 2.4 | 9.7 | 13343 | 53929 |
| 22400 | 2.4 | 9.7 | 13463 | 54414 |
| 22500 | 2.4 | 9.7 | 13584 | 54901 |
| 22600 | 2.4 | 9.7 | 13705 | 55390 |
| 22700 | 2.4 | 9.7 | 13826 | 55881 |
| 22800 | 2.4 | 9.7 | 13948 | 56375 |
| 22900 | 2.4 | 9.7 | 14071 | 56870 |
| 23000 | 2.4 | 9.7 | 14194 | 57368 |
| 23100 | 2.4 | 9.7 | 14318 | 57868 |
| 23200 | 2.4 | 9.7 | 14442 | 58370 |
| 23300 | 2.4 | 9.7 | 14567 | 58874 |
| 23400 | 2.4 | 9.7 | 14692 | 59381 |
| 23500 | 2.4 | 9.7 | 14818 | 59889 |
| 23600 | 2.4 | 9.7 | 14944 | 60400 |
| 23700 | 2.4 | 9.7 | 15071 | 60913 |
| 23800 | 2.4 | 9.7 | 15199 | 61428 |
| 23900 | 2.4 | 9.7 | 15327 | 61945 |
| 24000 | 2.4 | 9.7 | 15455 | 62465 |
| 24100 | 2.4 | 9.7 | 15584 | 62987 |
| 24200 | 2.4 | 9.7 | 15714 | 63510 |
| 24300 | 2.4 | 9.7 | 15844 | 64036 |
| 24400 | 2.4 | 9.7 | 15975 | 64564 |
| 24500 | 2.4 | 9.7 | 16106 | 65095 |
| 24600 | 2.4 | 9.7 | 16238 | 65627 |
| 24700 | 2.4 | 9.7 | 16370 | 66162 |
| 24800 | 2.4 | 9.7 | 16503 | 66699 |
| 24900 | 2.4 | 9.7 | 16636 | 67238 |
| 25000 | 2.4 | 9.7 | 16770 | 67779 |
| 25100 | 2.4 | 9.7 | 16904 | 68322 |
| 25200 | 2.4 | 9.7 | 17039 | 68868 |
| 25300 | 2.4 | 9.7 | 17175 | 69415 |
| 25400 | 2.4 | 9.7 | 17311 | 69965 |

| Speed rpm | $R_{min}$ | $R_{max}$ | RCF $R_{min}$ | RCF $R_{max}$ |
|---|---|---|---|---|
| 25500 | 2.4 | 9.7 | 17448 | 70517 |
| 25600 | 2.4 | 9.7 | 17585 | 71071 |
| 25700 | 2.4 | 9.7 | 17722 | 71627 |
| 25800 | 2.4 | 9.7 | 17860 | 72186 |
| 25900 | 2.4 | 9.7 | 17999 | 72747 |
| 26000 | 2.4 | 9.7 | 18138 | 73309 |
| 26100 | 2.4 | 9.7 | 18278 | 73874 |
| 26200 | 2.4 | 9.7 | 18419 | 74442 |
| 26300 | 2.4 | 9.7 | 18559 | 75011 |
| 26400 | 2.4 | 9.7 | 18701 | 75583 |
| 26500 | 2.4 | 9.7 | 18843 | 76156 |
| 26600 | 2.4 | 9.7 | 18985 | 76732 |
| 26700 | 2.4 | 9.7 | 19128 | 77310 |
| 26800 | 2.4 | 9.7 | 19272 | 77890 |
| 26900 | 2.4 | 9.7 | 19416 | 78473 |
| 27000 | 2.4 | 9.7 | 19561 | 79057 |

# Rotor Care Guide

**Contents**


- "Routine Evaluation and Care of Your Rotor" on page 30
- "Proper Handling" on page 30
- "Stress Corrosion" on page 30
- "Missing Paint and Anodization" on page 30
- "Dropped Rotors" on page 30
- "Overheating" on page 31
- "Rotor Maintenance" on page 31
- "Maintenance and Care" on page 32
- "Storage" on page 33
- "Decontamination" on page 33


Each time you use a rotor, visually inspect its condition for signs of physical wear or damage:

- Corrosion in the rotor cavities or exterior surfaces.
- Scratches or gouges to the base metal.
- Missing or worn anodizing.
- Damage to contact points, such as thread, hubs and screws.

Over time, stress observed in a typical fixed angle rotor will cause metal fatigue.

Heavy corrosion can result in premature rotor failure.

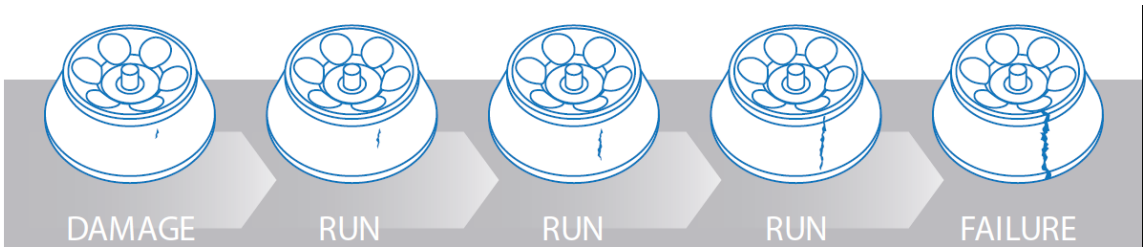

# Routine Evaluation and Care of Your Rotor

Rotors are frequently damaged in use and this damage may be exacerbated under centrifugal forces. As a result, even a tiny flaw in a critical part of the rotor may generate stresses greater than the rotor was designed to withstand. Rotors are also subject to high levels of stress due to the centrifugal force created by high rotational speeds, and repeated cycles can cause metal rotors to stretch and change in size.

## Proper Handling

Improper installation can lead to failure so it is imperative to:

- Always lock rotors to the spindle, if applicable.
- Ensure buckets are properly seated on their pins.
- Always use the tightening tool for locking and closing the rotor, if applicable.
- Use the proper rotor extractor tool to remove a rotor, if applicable.
- Avoid dropping or striking the rotor against a hard surface.
- Avoid putting anything inside the rotor that could scratch or nick the surface.

In addition, ensure that all tubes, bottles and adapters are being used within their specified limits and according to the manufacturer's directions. Tube or bottle failures during centrifugation can result in minor to severe damage to rotors and centrifuges.

## Stress Corrosion

Stress distribution is an important consideration when evaluating the extent of rotor damage. Ultraspeed rotors experience the highest level of stress of all rotors; if it is run above its rated speed, it probably has exceeded its yield point. In this event, the metal is permanently deformed and rotor life is severely compromised. Lower speed metal rotors will also become fatigued, depending on the rotor type, number of runs and the speed of those runs. However, corrosion, improper handling and misuse will often require that you retire your rotor long before normal fatigue becomes a danger.

## Missing Paint and Anodization

While missing paint will not affect the life of a titanium or carbon fiber rotor, missing anodization onan aluminum rotor may signal that it is time to retire the rotor.

## Dropped Rotors

Deformation caused by dropping a metal rotor cannot be repaired, requiring that the rotor be replaced. In some cases, carbon fiber rotors are repairable if damaged.

## Overheating

Melted bottles or other plastic or a rotor that is too hot to touch are indications that a rotor has overheated. Aluminum and carbon fiber rotors can be autoclaved up to 121 °C, while titanium and stainless steel rotors can withstand higher temperatures and are not likely to be damaged by heat generated in the centrifuge.

# Rotor Maintenance

Protect your rotor against damage or failure with preventive measures and maintain maximum centrifuge performance. However, if rotor damage is observed, ensure the safety of your lab by taking recommended action or contacting your sales representative for an inspection.

| Potential Damage | Preventive Measures | Recommended Action |
|---|---|---|
| Damage to lid assembly | • Lubricate periodically with a light film of o-ring or vacuum grease.<br>• Keep lid assembly lubricated with anti-galling grease<br>• Avoid banging or dropping<br>• Use care when removing o-rings.<br>• Clean with non-abrasive cloth and mild detergent. | Return lid assembly parts to manufacturer for repair or replacement. |
| Damage to biocontainment sealing lid | • Use care when removing o-rings.<br>• Inspect and replace o-rings regularly. | Replace sealing lid to ensure proper containment |
| Scoring to the bottom of the rotor (outside of cone area) | • Gently place rotor on the centrifuge spindle.<br>Clean with non-abrasive cloth and mild detergent.<br>• Inspect centrifuge mated parts for burrs and ensure no debris in centrifuge chamber.<br>• Store rotor on rotor stand or soft surface. | Return rotor to manufacturer for evaluation or replacement. |
| Damage to the rotor drive pins | • Gently place rotor on the centrifuge spindle.<br>• Ensure rotor is securely locked to centrifuge drive. | Return rotor to manufacturer for replacement of rotor hub adapter or replace rotor depending on degree of damage/corrosion. |
| Pitting from corrosion in the bottom of tube cavity (metal rotors) | • Ensure rotor is dried thoroughly between runs.<br>• Clean rotor immediately after use and when exposed to chemicals with approved solvent.<br>• Remove adapters after use, rinse and dry. | Return rotor to manufacturer for evaluation. |
| Cracked or de-laminated rotor | • Avoid sharp impact.<br>• Avoid harsh chemicals<br>• Clean the surface of rotor and coat with a thin layer of oil to prevent corrosion. | Return rotor to manufacturer for evaluation. |

| Potential Damage | Preventive Measures | Recommended Action |
|---|---|---|
| Damage to rotor tie-down threads | • Avoid cross threading of parts.<br>• Never use metallic or abrasive objects to clean.<br>• Clean and lubricate regularly. | Replace rotor tie-down assembly. |
| Damage to bucket seats | • Lubricate buckets regularly.<br>• Slide buckets into place carefully to avoid dropping or forcing into position. | Replace rotor bucket set. |
| Windshield damage | • Avoid banging or dropping.<br>• Do not exceed rotor's maximum compartment mass.<br>• Ensure windshield area is free of debris. | Replace rotor to avoid vibration that will wear the drive. |
| Rotor bucket cap damage | • Avoid cross threading of parts.<br>• Never use metallic objects to clean.<br>• Clean and lubricate regularly. | Replace rotor bucket caps and return set for rebalancing (if applicable). |
| Rotor bucket damage | • Avoid banging or dropping<br>• Do not exceed rotor's maximum compartment mass.<br>• Ensure buckets are free of debris. | Replace rotor buckets or return bucket set for rebalancing. |
| Gouges or corrosion on surface of rotor | • Inspect before every use. | Return rotor to manufacturer for evaluation or replacement. |
| Septa damage in continuous flow or zonal rotor | • Avoid sharp impact.<br>• Avoid harsh chemicals<br>• Clean the surface of rotor and coat with a thin layer of oil to prevent corrosion. | Return rotor to manufacturer for evaluation. |
| Light scratches on surface | • Avoid banging or dropping.<br>• Never use metallic objects to remove debris. | Monitor to ensure no corrosion has occurred. |
| Bent centrifuge spindle | • Remove rotor in a straight up motion.<br>• Ensure samples are properly balanced | Call service for replacement of centrifuge spindle |

Corrosion, pitting and even minor surface imperfections affect metal rotor life by increasing stress and, as a result, make it difficult to predict at what point the rotor material could fail.

## Maintenance and Care

Metal corrosion can be avoided by following a routine maintenance program after each rotor use:

- Clean rotors, lids, adapters and any associated parts with a neutral cleaning agent with a pH value between 6 and 8. Rinse with distilled water and dry thoroughly with a soft cloth.
- Do not use strong alkaline laboratory detergent on aluminum rotors; if encrusted material is present, remove it with a soft, twisted-bristle brush and the 1 % non-alkaline soap solution.
- For benchtop, lowspeed and superspeed swinging bucket rotors, keep the bucket trunnion pins clean and lubricated.

- Lubricate o-rings with vacuum grease and metal rotor threads with anti-galling grease (75003786) weekly, when specified in rotor manual.
- Apply an additional coating of anti-corrosion oil (70009824) to prolong the life of an anodized coating.
- Refer to the Maintenance and Care chapter in this rotor manual.

## Storage

Any moisture left on a metal rotor can initiate corrosion, so after cleaning ensure proper storage:

- Remove all adapters from rotor cavities when not in use.
- Dry and store upside-down Use a PTFE-coated or plastic matting to allow for airflow or a ventilated shelf to avoid gathering condensation in the cavity or bucket bottom.

## Decontamination

Given the nature of samples processed in a rotor, biological or radioactive contamination is possible. For biological contamination of rotors, a 2 % glutaraldehyde solution, ethylene oxide or ultraviolet radiation are the recommended methods of sterilization, While for a rotor that may be contaminated by a radioactive sample, use a solution of equal parts of 70 % ethanol, 10 % SDS and water. In addition:

- Do not use chlorine bleach on aluminum rotors.
- When autoclaving, rotor components should be separated.
- If sterilization is not necessary, a 70 % solution of ethanol can be used.
- Most commercially available detergents for radio isotopic contamination are not compatible with aluminum or anodized coatings and shall not be used.
- Rinse with ethanol, followed by water and dry with a soft cloth.
- Do not immerse Thermo Scientific Fiberlite rotors; spin rotor to remove liquid.
- Fiberlite composite rotors are not compatible with ethylene oxide.

# Chemical Compatibility Chart

| CHEMICAL / MATERIAL | ALUMINUM | ANODIC COATING for ALUMINUM | BUNA N | CELLULOSE ACETATE BUTYRATE | POLYURETHANE ROTOR PAINT | COMPOSITE Carbon Fiber/Epoxy | DELRIN | ETHYLENE PROPYLENE | GLASS | NEOPRENE | NORYL | NYLON | PET[1], POLYCLEAR, CLEARCRIMP | POLYALLOMER | POLYCARBONATE | POLYESTER, GLASS THERMOSET | POLYTHERMIDE | POLYRTHYLENE | POLYPROPYLENE | POLYSULFONE | POLYVINYL CHLORIDE | RULON A, TEFLON | SILICONE RUBBER | STAINLESS STEEL | TITANIUM | TYGON | VITON |
|---|---|---|---|---|---|---|---|---|---|---|---|---|---|---|---|---|---|---|---|---|---|---|---|---|---|---|---|
| 2-mercaptoethanol | S | S | U | - | S | M | S | - | S | U | S | S | U | S | S | - | S | S | S | S | U | S | S | S | S | S | S |
| Acetaldehyde | S | - | U | U | - | - | - | M | - | U | - | - | - | M | U | U | U | M | M | - | M | S | U | - | S | - | U |
| Acetone | M | S | U | U | S | U | M | S | S | U | U | S | U | S | U | U | U | S | S | U | U | S | M | M | S | U | U |
| Acetonitrile | S | S | U | - | S | M | S | - | S | S | U | S | U | M | U | U | - | S | M | U | U | S | S | S | S | U | U |
| Alconox | U | U | S | - | S | S | S | - | S | S | S | S | S | S | M | S | S | S | S | S | S | S | S | S | S | S | U |
| Allyl Alcohol | - | - | - | U | - | - | S | - | - | - | - | S | - | S | S | M | S | S | S | - | M | S | - | - | S | - | - |
| Aluminum Chloride | U | U | S | S | S | S | U | S | S | S | S | M | S | S | S | S | - | S | S | S | S | S | M | U | U | S | S |
| Formic Acid (100%) | - | S | M | U | - | - | U | - | - | - | - | U | - | S | M | U | U | S | S | - | U | S | - | U | S | - | U |
| Ammonium Acetate | S | S | U | - | S | S | S | - | S | S | S | S | S | S | S | U | - | S | S | S | S | S | S | S | S | S | S |
| Ammonium Carbonate | M | S | U | S | S | S | S | S | S | S | S | S | S | S | U | U | - | S | S | S | S | S | S | M | S | S | S |
| Ammonium Hydroxide (10 %) | U | U | S | U | S | S | M | S | S | S | S | S | - | S | U | M | S | S | S | S | S | S | S | S | S | M | S |
| Ammonium Hydroxide (28 %) | U | U | S | U | S | U | M | S | S | S | S | S | U | S | U | M | S | S | S | S | S | S | S | S | S | M | S |
| Ammonium Hydroxide (conc.) | U | U | U | U | S | U | M | S | - | S | - | S | U | S | U | U | S | S | S | - | M | S | S | S | S | - | U |
| Ammonium Phosphate | U | - | S | - | S | S | S | S | S | S | S | S | - | S | S | M | - | S | S | S | S | S | S | M | S | S | S |
| Ammonium Sulfate | U | M | S | - | S | S | U | S | S | S | S | S | S | S | S | S | - | S | S | S | S | S | S | U | S | S | U |
| Amyl Alcohol | S | - | M | U | - | - | S | S | - | M | - | S | - | M | S | S | S | S | M | - | - | - | U | - | S | - | M |
| Aniline | S | S | U | U | S | U | S | M | S | U | U | U | U | U | U | U | - | S | M | U | U | S | S | S | S | U | S |
| Sodium Hydroxide (<1 %) | U | - | M | S | S | S | - | - | S | M | S | S | - | S | M | M | S | S | S | S | S | S | M | S | S | - | U |
| Sodium Hydroxide (10 %) | U | - | M | U | - | - | U | - | M | M | S | S | U | S | U | U | S | S | S | S | S | S | M | S | S | - | U |
| Barium Salts | M | U | S | - | S | S | S | S | S | S | S | S | S | S | S | M | - | S | S | S | S | S | S | M | S | S | S |
| Benzene | S | S | U | U | S | U | M | U | S | U | U | S | U | U | U | M | U | M | U | U | U | S | U | U | S | U | S |
| Benzyl Alcohol | S | - | U | U | - | - | M | M | - | M | - | S | U | U | U | U | U | U | U | - | M | S | M | - | S | - | S |
| Boric Acid | U | S | S | M | S | S | U | S | S | S | S | S | S | S | S | S | U | S | S | S | S | S | S | S | S | S | S |
| Cesium Acetate | M | - | S | - | S | S | S | - | S | S | S | S | - | S | S | - | - | S | S | S | S | S | S | M | S | S | S |

| CHEMICAL / MATERIAL | ALUMINUM | ANODIC COATING for ALUMINUM | BUNA N | CELLULOSE ACETATE BUTYRATE | POLYURETHANE ROTOR PAINT | COMPOSITE Carbon Fiber/Epoxy | DELRIN | ETHYLENE PROPYLENE | GLASS | NEOPRENE | NORYL | NYLON | PET[1], POLYCLEAR, CLEARCRIMP | POLYALLOMER | POLYCARBONATE | POLYESTER, GLASS THERMOSET | POLYTHERMIDE | POLYRTHYLENE | POLYPROPYLENE | POLYSULFONE | POLYVINYL CHLORIDE | RULON A, TEFLON | SILICONE RUBBER | STAINLESS STEEL | TITANIUM | TYGON | VITON |
|---|---|---|---|---|---|---|---|---|---|---|---|---|---|---|---|---|---|---|---|---|---|---|---|---|---|---|---|
| Cesium Bromide | M | S | S | - | S | S | S | - | S | S | S | S | S | S | S | - | - | S | S | S | S | S | S | M | S | S | S |
| Cesium Chloride | M | S | S | U | S | S | S | - | S | S | S | S | S | S | S | - | - | S | S | S | S | S | S | M | S | S | S |
| Cesium Formate | M | S | S | - | S | S | S | - | S | S | S | S | S | S | S | - | - | S | S | S | S | S | S | M | S | S | S |
| Cesium Iodide | M | S | S | - | S | S | S | - | S | S | S | S | S | S | S | - | - | S | S | S | S | S | S | M | S | S | S |
| Cesium Sulfate | M | S | S | - | S | S | S | - | S | S | S | S | S | S | S | - | - | S | S | S | S | S | S | M | S | S | S |
| Chloroform | U | U | U | U | S | S | M | U | S | U | U | M | U | M | U | U | U | M | M | U | U | S | U | U | U | M | S |
| Chromic Acid (10 %) | U | - | U | U | S | U | U | - | S | S | S | U | S | S | M | U | M | S | S | U | M | S | M | U | S | S | S |
| Chromic Acid (50 %) | U | - | U | U | - | U | U | - | - | - | S | U | U | S | M | U | M | S | S | U | M | S | - | U | M | - | S |
| Cresol Mixture | S | S | U | - | - | - | S | - | S | U | U | U | U | U | U | - | - | U | U | - | U | S | S | S | S | U | S |
| Cyclohexane | S | S | S | - | S | S | S | U | S | U | S | S | U | U | U | M | S | M | U | M | M | S | U | M | M | U | S |
| Deoxycholate | S | S | S | - | S | S | S | - | S | S | S | S | S | S | S | - | - | S | S | S | S | S | S | S | S | S | S |
| Distilled Water | S | S | S | S | S | S | S | S | S | S | S | S | S | S | S | S | S | S | S | S | S | S | S | S | S | S | S |
| Dextran | M | S | S | S | S | S | S | - | S | S | S | S | S | S | S | S | S | S | S | S | S | S | S | M | S | S | S |
| Diethyl Ether | S | S | U | U | S | S | S | U | S | U | U | S | U | U | U | U | U | U | U | U | U | S | S | S | S | M | U |
| Diethyl Ketone | S | - | U | U | - | - | M | - | S | U | - | S | - | M | U | U | U | M | M | - | U | S | - | - | S | U | U |
| Diethylpyrocarbonate | S | S | U | - | S | S | S | - | S | S | U | S | U | S | U | - | - | S | S | S | M | S | S | S | S | S | S |
| Dimethylsulfoxide | S | S | U | U | S | S | S | - | S | U | S | S | U | S | U | U | - | S | S | U | U | S | S | S | S | U | U |
| Dioxane | M | S | U | U | S | S | M | M | S | U | U | S | U | M | U | U | - | M | M | M | U | S | S | S | S | U | U |
| Ferric Chloride | U | U | S | - | - | - | M | S | - | M | - | S | - | S | - | - | - | S | S | - | - | - | M | U | S | - | S |
| Acetic Acid (Glacial) | S | S | U | U | S | S | U | M | S | U | S | U | U | U | U | U | M | S | U | M | U | S | U | U | S | - | U |
| Acetic Acid (5 %) | S | S | M | S | S | S | M | S | S | S | S | S | M | S | S | S | S | S | S | S | M | S | S | M | S | S | M |
| Acetic Acid (60 %) | S | S | U | U | S | S | U | - | S | M | S | U | U | M | U | S | M | S | M | S | M | S | M | U | S | M | U |
| Ethyl Acetate | M | M | U | U | S | S | M | M | S | S | U | S | U | M | U | U | - | S | S | U | U | S | M | M | S | U | U |
| Ethyl Alcohol (50 %) | S | S | S | S | S | S | M | S | S | S | S | S | U | S | U | S | S | S | S | S | S | S | S | M | S | M | U |
| Ethyl Alcohol (95 %) | S | S | S | U | S | S | M | S | S | S | S | S | U | S | U | - | S | S | S | M | S | S | S | U | S | M | U |
| Ethylene Dichloride | S | - | U | U | - | - | S | M | - | U | U | S | U | U | U | U | U | U | U | - | U | S | U | - | S | - | S |
| Ethylene Glycol | S | S | S | S | S | S | S | S | S | S | S | S | - | S | U | S | S | S | S | S | S | S | S | M | S | M | S |
| Ethylene Oxide Vapor | S | - | U | - | - | U | - | - | S | U | - | S | - | S | M | - | - | S | S | S | U | S | U | S | S | S | U |
| Ficoll-Hypaque | M | S | S | - | S | S | S | - | S | S | S | S | - | S | S | - | S | S | S | S | S | S | S | M | S | S | S |
| Hydrofluoric Acid (10 %) | U | U | U | M | - | - | U | - | - | U | U | S | - | S | M | U | S | S | S | S | M | S | U | U | U | - | - |
| Hydrofluoric Acid (50 %) | U | U | U | U | - | - | U | - | - | U | U | U | U | S | U | U | U | S | S | M | M | S | U | U | U | - | M |

| CHEMICAL / MATERIAL | ALUMINUM | ANODIC COATING for ALUMINUM | BUNA N | CELLULOSE ACETATE BUTYRATE | POLYURETHANE ROTOR PAINT | COMPOSITE Carbon Fiber/Epoxy | DELRIN | ETHYLENE PROPYLENE | GLASS | NEOPRENE | NORYL | NYLON | PET[1], POLYCLEAR, CLEARCRIMP | POLYALLOMER | POLYCARBONATE | POLYESTER, GLASS THERMOSET | POLYTHERMIDE | POLYRTHYLENE | POLYPROPYLENE | POLYSULFONE | POLYVINYL CHLORIDE | RULON A, TEFLON | SILICONE RUBBER | STAINLESS STEEL | TITANIUM | TYGON | VITON |
|---|---|---|---|---|---|---|---|---|---|---|---|---|---|---|---|---|---|---|---|---|---|---|---|---|---|---|---|
| Hydrochloric Acid (conc.) | U | U | U | U | - | U | U | M | - | U | M | U | U | M | U | U | U | - | S | - | U | S | U | U | U | - | - |
| Formaldehyde (40 %) | M | M | M | S | S | S | S | M | S | S | S | S | M | S | S | S | U | S | S | M | S | S | S | M | S | M | U |
| Glutaraldehyde | S | S | S | S | - | - | S | - | S | S | S | S | S | S | S | - | - | S | S | S | - | - | S | S | S | - | - |
| Glycerol | M | S | S | - | S | S | S | S | S | S | S | S | S | S | S | S | - | S | S | S | S | S | S | S | S | S | S |
| Guanidine Hydrochloride | U | U | S | - | S | S | S | - | S | S | S | S | S | S | S | - | - | S | S | S | S | S | S | U | S | S | S |
| Haemo-Sol | S | S | S | - | - | - | S | - | S | S | S | S | S | S | S | - | - | S | S | S | S | S | S | S | S | S | S |
| Hexane | S | S | S | - | S | S | S | - | S | S | U | S | U | M | U | S | S | U | S | S | M | S | U | S | S | U | S |
| Isobutyl Alcohol | - | - | M | U | - | - | S | S | - | U | - | S | U | S | S | M | S | S | S | - | S | S | S | - | S | - | S |
| Isopropyl Alcohol | M | M | M | U | S | S | S | S | S | U | S | S | U | S | U | M | S | S | S | S | S | S | S | M | M | M | S |
| Iodoacetic Acid | S | S | M | - | S | S | S | - | S | M | S | S | M | S | S | - | M | S | S | S | S | S | M | S | S | M | M |
| Potassium Bromide | U | S | S | - | S | S | S | - | S | S | S | S | S | S | S | S | S | S | S | - | S | S | S | M | S | S | S |
| Potassium Carbonate | M | U | S | S | S | S | S | - | S | S | S | S | S | S | U | S | S | S | S | S | S | S | S | S | S | S | S |
| Potassium Chloride | U | S | S | - | S | S | S | S | S | S | S | S | S | S | S | - | S | S | S | S | S | S | S | U | S | S | S |
| Potassium Hydroxide (5 %) | U | U | S | S | S | S | M | - | S | S | S | S | - | S | U | S | S | S | S | S | S | S | M | U | M | S | U |
| Potassium Hydroxide (conc.) | U | U | M | U | - | - | M | - | M | S | S | - | U | M | U | U | U | S | M | - | M | U | - | U | U | - | U |
| Potassium Permanganate | S | S | S | - | S | S | S | - | S | S | S | U | S | S | S | M | - | S | M | S | U | S | S | M | S | U | S |
| Calcium Chloride | M | U | S | S | S | S | S | S | S | S | S | S | S | S | M | S | - | S | S | S | S | S | S | M | S | S | S |
| Calcium Hypochlorite | M | - | U | - | S | M | M | S | - | M | - | S | - | S | M | S | - | S | S | S | M | S | M | U | S | - | S |
| Kerosene | S | S | S | - | S | S | S | U | S | M | U | S | U | M | M | S | - | M | M | M | S | S | U | S | S | U | S |
| Sodium Chloride (10 %) | S | - | S | S | S | S | S | S | - | - | - | S | S | S | S | S | - | S | S | S | S | - | S | S | M | - | S |
| Sodium Chloride (sat'd) | U | - | S | U | S | S | S | - | - | - | - | S | S | S | S | S | - | S | S | - | S | - | S | S | M | - | S |
| Carbon Tetrachloride | U | U | M | S | S | U | M | U | S | U | U | S | U | M | U | S | S | M | M | S | M | M | M | M | U | S | S |
| Aqua Regia | U | - | U | U | - | - | U | - | - | - | - | - | U | U | U | U | U | U | U | - | - | - | - | - | S | - | M |
| Solution 555 (20 %) | S | S | S | - | - | - | S | - | S | S | S | S | S | S | S | - | - | S | S | S | - | S | S | S | S | S | S |
| Magnesium Chloride | M | S | S | - | S | S | S | S | S | S | S | S | S | S | S | S | S | S | S | S | S | S | S | M | S | S | S |
| Mercaptoacetic Acid | U | S | U | - | S | M | S | - | S | M | S | U | U | U | U | - | S | U | U | S | M | S | U | S | S | S | S |
| Methyl Alcohol | S | S | S | U | S | S | M | S | S | S | S | S | U | S | U | M | S | S | S | S | S | S | S | M | S | M | U |
| Methylene Chloride | U | U | U | U | M | S | S | U | S | U | U | S | U | U | U | U | U | M | U | U | U | S | S | M | U | S | U |
| Methyl Ethyl Ketone | S | S | U | U | S | S | M | S | S | U | U | S | U | S | U | U | U | S | S | U | U | S | S | S | S | U | U |
| Metrizamide | M | S | S | - | S | S | S | - | S | S | S | S | - | S | S | - | - | S | S | S | S | S | S | M | S | S | S |
| Lactic Acid (100 %) | - | - | S | - | - | - | - | - | - | M | S | U | - | S | S | S | M | S | S | - | M | S | M | S | S | - | S |

| CHEMICAL / MATERIAL | ALUMINUM | ANODIC COATING for ALUMINUM | BUNA N | CELLULOSE ACETATE BUTYRATE | POLYURETHANE ROTOR PAINT | COMPOSITE Carbon Fiber/Epoxy | DELRIN | ETHYLENE PROPYLENE | GLASS | NEOPRENE | NORYL | NYLON | PET[1], POLYCLEAR, CLEARCRIMP | POLYALLOMER | POLYCARBONATE | POLYESTER, GLASS THERMOSET | POLYTHERMIDE | POLYRTHYLENE | POLYPROPYLENE | POLYSULFONE | POLYVINYL CHLORIDE | RULON A, TEFLON | SILICONE RUBBER | STAINLESS STEEL | TITANIUM | TYGON | VITON |
|---|---|---|---|---|---|---|---|---|---|---|---|---|---|---|---|---|---|---|---|---|---|---|---|---|---|---|---|
| Lactic Acid (20%) | - | - | S | S | - | - | - | - | - | M | S | M | - | S | S | S | S | S | S | S | M | S | M | S | S | - | S |
| N-Butyl Alcohol | S | - | S | U | - | - | S | - | - | S | M | - | U | S | M | S | S | S | S | M | M | S | M | - | S | - | S |
| N-Butyl Phthalate | S | S | U | - | S | S | S | - | S | U | U | S | U | U | U | M | - | U | U | S | U | S | M | M | S | U | S |
| N, N-Dimethylformamide | S | S | S | U | S | M | S | - | S | S | U | S | U | S | U | U | - | S | S | U | U | S | M | S | S | S | U |
| Sodium Borate | M | S | S | S | S | S | S | S | S | S | S | U | S | S | S | S | - | S | S | S | S | S | S | M | S | S | S |
| Sodium Bromide | U | S | S | - | S | S | S | - | S | S | S | S | S | S | S | S | - | S | S | S | S | S | S | M | S | S | S |
| Sodium Carbonate (2 %) | M | U | S | S | S | S | S | S | S | S | S | S | S | S | U | S | S | S | S | S | S | S | S | S | S | S | S |
| Sodium Dodecyl Sulfate | S | S | S | - | S | S | S | - | S | S | S | S | S | S | S | - | S | S | S | S | S | S | S | S | S | S | S |
| Sodium Hypochlorite (5 %) | U | U | M | S | S | M | U | S | S | M | S | S | S | M | S | S | S | S | M | S | S | S | M | U | S | M | S |
| Sodium Iodide | M | S | S | - | S | S | S | - | S | S | S | S | S | S | S | - | - | S | S | S | S | S | S | M | S | S | S |
| Sodium Nitrate | S | S | S | - | S | S | S | S | S | S | S | S | S | S | S | S | - | S | S | S | S | S | U | S | S | S | S |
| Sodium Sulfate | U | S | S | - | S | S | S | S | S | S | S | S | S | S | S | S | S | S | S | S | S | S | S | M | S | S | S |
| Sodium Sulfide | S | - | S | S | - | - | - | S | - | - | - | S | S | S | U | U | - | - | S | - | - | - | S | S | M | - | S |
| Sodium Sulfite | S | S | S | - | S | S | S | S | M | S | S | S | S | S | S | M | - | S | S | S | S | S | S | S | S | S | S |
| Nickel Salts | U | S | S | S | S | S | - | S | S | S | - | - | S | S | S | S | - | S | S | S | S | S | S | M | S | S | S |
| Oils (Petroleum) | S | S | S | - | - | - | S | U | S | S | S | S | U | U | M | S | M | U | U | S | S | S | U | S | S | S | S |
| Oils (Other) | S | - | S | - | - | - | S | M | S | S | S | S | U | S | S | S | S | U | S | S | S | S | - | S | S | M | S |
| Oleic Acid | S | - | U | S | S | S | U | U | S | U | S | S | M | S | S | S | S | S | S | S | S | S | M | U | S | M | M |
| Oxalic Acid | U | U | M | S | S | S | U | S | S | S | S | S | U | S | U | S | S | S | S | S | S | S | S | U | M | S | S |
| Perchloric Acid (10 %) | U | - | U | - | S | U | U | - | S | M | M | - | - | M | U | M | S | M | M | - | M | S | U | - | S | - | S |
| Perchloric Acid (70 %) | U | U | U | - | - | U | U | - | S | U | M | U | U | M | U | U | U | M | M | U | M | S | U | U | S | U | S |
| Phenol (5 %) | U | S | U | - | S | M | M | - | S | U | M | U | U | S | U | M | S | M | S | U | U | S | U | M | M | M | S |
| Phenol (50 %) | U | S | U | - | S | U | M | - | S | U | M | U | U | U | U | U | S | U | M | U | U | S | U | U | U | M | S |
| Phosphoric Acid (10 %) | U | U | M | S | S | S | U | S | S | S | S | U | - | S | S | S | S | S | S | S | S | S | U | M | U | S | S |
| Phosphoric Acid (conc.) | U | U | M | M | - | - | U | S | - | M | S | U | U | M | M | S | S | S | M | S | M | S | U | M | U | - | S |
| Physiologic Media (Serum, Urine) | M | S | S | S | - | - | S | - | S | S | S | S | S | S | S | S | S | S | S | S | S | S | S | S | S | S | S |
| Picric Acid | S | S | U | - | S | M | S | S | S | M | S | U | S | S | S | U | S | S | S | S | U | S | U | M | S | M | S |
| Pyridine (50 %) | U | S | U | U | S | U | U | - | U | S | S | U | U | M | U | U | - | U | S | M | U | S | S | U | U | U | U |
| Rubidium Bromide | M | S | S | - | S | S | S | - | S | S | S | S | S | S | S | - | - | S | S | S | S | S | S | M | S | S | S |
| Rubidium Chloride | M | S | S | - | S | S | S | - | S | S | S | S | S | S | S | - | - | S | S | S | S | S | S | M | S | S | S |
| Sucrose | M | S | S | - | S | S | S | S | S | S | S | S | S | S | S | S | S | S | S | S | S | S | S | S | S | S | S |

| CHEMICAL / MATERIAL | ALUMINUM | ANODIC COATING for ALUMINUM | BUNA N | CELLULOSE ACETATE BUTYRATE | POLYURETHANE ROTOR PAINT | COMPOSITE Carbon Fiber/Epoxy | DELRIN | ETHYLENE PROPYLENE | GLASS | NEOPRENE | NORYL | NYLON | PET[1], POLYCLEAR, CLEARCRIMP | POLYALLOMER | POLYCARBONATE | POLYESTER, GLASS THERMOSET | POLYTHERMIDE | POLYRTHYLENE | POLYPROPYLENE | POLYSULFONE | POLYVINYL CHLORIDE | RULON A, TEFLON | SILICONE RUBBER | STAINLESS STEEL | TITANIUM | TYGON | VITON |
|---|---|---|---|---|---|---|---|---|---|---|---|---|---|---|---|---|---|---|---|---|---|---|---|---|---|---|---|
| Sucrose, Alkaline | M | S | S | - | S | S | S | - | S | S | S | S | S | S | U | S | S | S | S | S | S | S | S | M | S | S | S |
| Sulfosalicylic Acid | U | U | S | S | S | S | S | - | S | S | S | U | S | S | S | - | S | S | S | - | S | S | S | U | S | S | S |
| Nitric Acid (10 %) | U | S | U | S | S | U | U | - | S | U | S | U | - | S | S | S | S | S | S | S | S | S | M | S | S | S | S |
| Nitric Acid (50 %) | U | S | U | M | S | U | U | - | S | U | S | U | U | M | M | U | M | M | M | S | S | S | U | S | S | M | S |
| Nitric Acid (95 %) | U | - | U | U | - | U | U | - | - | U | U | U | U | M | U | U | U | U | M | U | U | S | U | S | S | - | S |
| Hydrochloric Acid (10 %) | U | U | M | S | S | S | U | - | S | S | S | U | U | S | U | S | S | S | S | S | S | S | S | U | M | S | S |
| Hydrochloric Acid (50 %) | U | U | U | U | S | U | U | - | S | M | S | U | U | M | U | U | S | S | S | S | M | S | M | U | U | M | M |
| Sulfuric Acid (10 %) | M | U | U | S | S | U | U | - | S | S | M | U | S | S | S | S | S | S | S | S | S | S | U | U | U | S | S |
| Sulfuric Acid (50 %) | M | U | U | U | S | U | U | - | S | S | M | U | U | S | U | U | M | S | S | S | S | S | U | U | U | M | S |
| Sulfuric Acid (conc.) | M | U | U | U | - | U | U | M | - | - | M | U | U | S | U | U | U | M | S | U | M | S | U | U | U | - | S |
| Stearic Acid | S | - | S | - | - | - | S | M | S | S | S | S | - | S | S | S | S | S | S | S | S | S | M | M | S | S | S |
| Tetrahydrofuran | S | S | U | U | S | U | U | M | S | U | U | S | U | U | U | - | M | U | U | U | U | S | U | S | S | U | U |
| Toluene | S | S | U | U | S | S | M | U | S | U | U | S | U | U | U | S | U | M | U | U | U | S | U | S | U | U | M |
| Trichloroacetic Acid | U | U | U | - | S | S | U | M | S | U | S | U | U | S | M | - | M | S | S | U | U | S | U | U | U | M | U |
| Trichloroethane | S | - | U | - | - | - | M | U | - | U | - | S | U | U | U | U | U | U | U | U | U | S | U | - | S | - | S |
| Trichloroethylene | - | - | U | U | - | - | - | U | - | U | - | S | U | U | U | U | U | U | U | U | U | S | U | - | U | - | S |
| Trisodium Phosphate | - | - | - | S | - | - | M | - | - | - | - | - | - | S | - | - | S | S | S | - | - | S | - | - | S | - | S |
| Tris Buffer (neutral pH) | U | S | S | S | S | S | S | - | S | S | S | S | S | S | S | S | S | S | S | S | S | S | S | S | S | S | S |
| Triton X-100 | S | S | S | - | S | S | S | - | S | S | S | S | S | S | S | S | S | S | S | S | S | S | S | S | S | S | S |
| Urea | S | - | U | S | S | S | S | - | - | - | - | S | S | S | M | S | S | S | S | - | S | S | S | M | S | - | S |
| Hydrogen Peroxide (10 %) | U | U | M | S | S | U | U | - | S | S | S | U | S | S | S | M | U | S | S | S | S | S | S | M | S | U | S |
| Hydrogen Peroxide (3 %) | S | M | S | S | S | - | S | - | S | S | S | S | S | S | S | S | M | S | S | S | S | S | S | S | S | S | S |
| Xylene | S | S | U | S | S | S | M | U | S | U | U | U | U | U | U | M | U | M | U | U | U | S | U | M | S | U | S |
| Zinc Chloride | U | U | S | S | S | S | U | S | S | S | S | S | S | S | S | S | S | S | S | S | S | S | S | U | S | S | S |
| Zinc Sulfate | U | S | S | - | S | S | S | S | S | S | S | S | S | S | S | S | S | S | S | S | S | S | S | S | S | S | S |
| Citric Acid (10 %) | M | S | S | M | S | S | M | S | S | S | S | S | S | S | S | S | M | S | S | S | S | S | S | S | S | S | S |

[1]Polyethyleneterephthalate

**Key**

S Satisfactory

M Moderate attack, may be satisfactory for use in centrifuge depending on length of exposure, speed involved, etc. Suggest testing under actual conditions of use.

U Unsatisfactory, not recommended.

-- Performance unknown; suggest testing, using sample to avoid loss of valuable material.

Chemical resistance data is included only as a guide to product use. No organized chemical resistance data exists for materials under the stress of centrifugation. When in doubt we recommend pretesting sample lots.

# Index


**A**

Aerosol-tight Applications ..... 11
Autoclaving ..... 18
AutoLock ..... 5

**B**

Basic Principles ..... 11
Before a Run ..... 9
Bottles ..... 2

**C**

Care ..... 13
Checking the Aerosol-Tightness ..... 11
Cleaning ..... 13
Close Rotor ..... 5

**D**

Decontamination ..... 17
Deposing of Accessories ..... 19
Desinfection ..... 16

**F**

Fill Level ..... 11

**I**

Improper Loading ..... 10
Information on Tubes and Bottles ..... 2
Intervals ..... 13

**L**

Lifetime ..... 10

**M**

Maintenance ..... 13
Maintenance of O-Rings in Rotor Lid ..... 15
Maximum Loading ..... 10

**O**

Open the Rotor ..... 5

**P**

Precautions ..... iii
Preface ..... ii
Proper Loading ..... 9

**Q**

Quick Test ..... 12

**R**

RCF-Values ..... 21
Removing the Rotor ..... 6
Rotor Accessory ..... 2
Rotor Data ..... 1
Rotor Information ..... 1
Rotor Installation ..... 5
Rotor Loading ..... 9
Rotor Package ..... 2

**S**

Scope of Supply ..... ii
Shipping of Accessories ..... 19

**T**

Tubes ..... 2

thermoscientific

**Thermo Electron LED GmbH**
Zweigniederlassung Osterode
Am Kalkberg, 37520 Osterode am Harz
Germany

**thermofisher.com/rotors**

© 2022 Thermo Fisher Scientific Inc. All rights reserved.
All trademarks are the property of Thermo Fisher Scientific Inc. and its subsidiaries unless otherwise indicated.

Delrin is a registered trademark of Dupont Polymers, Inc. TEFLON and Viton are registered trademarks of The Chemours Company FC. Noryl and Valox are registered trademarks of Sabic Global Technologies. POLYCLEAR is a registered trademark of Hongye CO., Ltd. Hypaque is a registered trademark of Amersham Health AS. RULON A and Tygon are registered trademarks of Saint-Gobain Performance Plastics. Alconox is a registered trademark of Alconox, Inc. Ficoll is a registered trademark of Cytiva Sweden AB. Haemo-Sol is a registered trademark of Haemo-Sol International, LLC. Triton is a registered trademark of Union Carbide Corporation.

Specifications, terms and pricing are subject to change. Not all products are available in all countries. Please consult your local sales represen-tative for details.
Shown pictures within the manual are examples and may differ considering the set parameters and language. Pictures of the user interface within the manual are showing the English version as example.

**Australia** +61 39757 4300
**Austria** +43 1 801 40 0
**Belgium** +32 9 272 54 82
**China** +800 810 5118, +400 650 5118
**France** +33 2 2803 2180
**Germany national toll free**
0800 1 536 376
**Germany international** +49 6184 90 6000
**India toll free** +1800 22 8374
**India** +91 22 6716 2200
**Italy** +39 02 95059 552
**Japan** +81 3 5826 1616
**Korea** +82 2 2023 0600
**Netherlands** +31 76 579 55 55
**New Zealand** +64 9 980 6700
**Nordic/Baltic/CIS countries**
+358 10 329 2200
**Russia** +7 812 703 42 15, +7 495 739 76 41
**Singapore** +82 2 3420 8700
**Spain/Portugal** +34 93 223 09 18
**Switzerland** +41 44 454 12 12
**UK/Ireland** +44 870 609 9203
**USA/Canada** +1 866 984 3766
**Other Asian Countries** +852 3107 7600
**Countries not listed** +49 6184 90 6000

en

50138015 is the original instruction manual.

ThermoFisher SCIENTIFIC