fisherbrand

Instruction manual

Fisherbrand GT1 Centrifuge
Fisherbrand GT1R Centrifuge

50156465-c • 11 / 2023

15878722
15868722

fisher scientific
part of Thermo Fisher Scientific

IMPORTANT Read this instruction manual. Failure to follow the instructions in this manual can result in damage to the unit, injury to operating personnel and poor equipment performance.

CAUTION All internal adjustments and maintenance must be performed by qualified service personnel.

Material in this manual is for informational purposes only. The contents and the product it describes are subject to change without notice. Thermo Fisher Scientific makes no representations or warranties with respect to this manual. In no event shall be held liable for any damages, direct or incidental, arising from or related to the use of this manual.

HIGHConic™, CLINIConic™, MicroClick™ and Auto-Lock™.

All trademarks are the property of Thermo Fisher Scientific Inc. and its subsidiaries unless otherwise specified.

© 2023 Thermo Fisher Scientific Inc. All rights reserved.

Table of Contents

Preface 1
- Items Supplied 1
- Intended Use 1
- Precautions 1
- Symbols used on the Centrifuge 2

Technical Specifications 3
- Technical Data 3
- Directives, Standards and Guidelines 4
- Mains Supply 4
- Refrigerant 4
- Rotor Selection 5

Transport and Set Up 6
- Before Setting Up 6
- Location 6
- Transporting 6
- Leveling 6
- Mains Connection 7
- Storage 7
- Shipping 7

Control Panel 8
- Control Panel 8
- Keys 8

Operation 9
- Switching on the Centrifuge 9
- Open the Centrifuge Door 9
- Close the Centrifuge Door 9

Rotor Installation 9
Acceleration / Deceleration Rates 10
Programs 12
Centrifugation 12
Short-term Centrifugation 13
Removing the Rotor 13
Aerosol-Tight Rotors 14
Switch off Centrifuge 14

System Menu 15
Flowchart System Menu 15

Maintenance and Care 16
Cleaning Intervals 16
Basics 16
Cleaning 16
Disinfection 17
Decontamination 18
Autoclaving 18
Maintenance and Repair Services 18
Shipping and Disposal 19

Troubleshooting 20
Mechanical Emergency Door Release 20
Troubleshooting by Guide 21
When to contact Customer Service 22

Chemical Compatibility Chart 23

Preface

Before starting to use the centrifuge, read through this instruction manual carefully and follow the instructions.

The information contained in this instruction manual is the property of Thermo Fisher Scientific; it is forbidden to copy or pass on this information without explicit approval.

Failure to follow the instructions and safety information in this instruction manual may void of the sellers warranty.

Items Supplied

Items	Quantity	Check
Centrifuge GT 1 / 1R	**1**	☐
Power supply cable	**1**	☐
Instruction manual	**1**	☐
CD	**1**	☐

If any parts are missing, contact your nearest Fisher Scientific sales representative.

Intended Use

This centrifuge is designed to separate sample mixtures of different densities like chemicals, environmental samples and other non-human body samples.

Precautions

Observe the safety instructions. Not following these instructions can cause damage.

The centrifuge is to be used for its intended use only. Improper use can cause damages, contamination, and injuries with fatal consequences.

The centrifuge should be operated by trained specialists only.

In order to ensure safe operation of the Fisherbrand GT 1 / 1R centrifuge, general safety regulations must be followed. Mind the regulations in your country.

Set Up Conditions

- Plug the centrifuge only into sockets which have been properly grounded.
- Turn OFF the centrifuge at the main switch. The mains plug must be freely accessible at all times.

  Press the STOP key to shut down the centrifuge.

  Pull out the power supply plug or disconnect the power supply in an emergency.
- As safety zone maintain a clear radius of at least 30 cm around the centrifuge.

  Do not place any dangerous substances within this security zone.
- Set up in a well-ventilated environment, on a horizontally leveled and rigid surface with adequate load-bearing capacity.

Preparation

- It is the obligation of the operator to make sure, that the proper protective clothing is used. Mind the “Laboratory Biosafety Manual” of the World Health Organization (WHO) and the regulations in your country.
- Do not make any changes to the mechanical components of the rotor.
- Do not touch the electronic components of the centrifuge nor alter any electronic or mechanical components.
- Use only with rotors which have been properly installed. Follow the instructions on the Thermo Scientific™ Auto-Lock™ rotor exchange in section **Rotor Installation**.
- Do not use rotors, buckets or accessories that show any signs of removed protective coating, corrosion or cracks. Contact customer service for further advice or inspections.
- Use only with rotors which have been loaded properly.
- Never overload the rotor.
- Always balance the samples.
- Use only rotors and accessories approved for this centrifuge. Exceptions to this rule are commercially available glass or plastic centrifuge labware, provided they have been designed to fit rotor or adapter cavities

and are approved for the speed or the RCF value of the rotor.

- Make sure the rotor is locked properly into place before operating the centrifuge.
- Implement measures which ensure that no one can approach the centrifuge for longer than absolutely necessary while it is running.
- If used for foodstuffs machinery, for cosmetics or pharmaceutical products, only use closed or aerosol-tight containers for centrifugation.

Hazardous Substances

- Especially when working with corrosive samples (salt solutions, acids, bases), the accessory parts and vessel have to be cleaned thoroughly.
- Do not centrifuge explosive or flammable materials or substances.
- The centrifuge is neither inert nor protected against explosion. Never use the centrifuge in an explosion-prone environment.
- Do not centrifuge toxic or radioactive materials or any pathogenic micro-organisms without suitable safety precautions.

If centrifuging any hazardous materials mind the “Laboratory Biosafety Manual” of the World Health Organization (WHO) and any local regulations. When centrifuging microbiological samples from the Risk Group II (according to the “Laboratory Biosafety Manual” of the World Health Organization (WHO)), aerosol-tight biological seals have to be used. Look on the internet page of the World Health Organization (www.who.int) for the “Laboratory Biosafety Manual”.

For materials in a higher risk group, extra safety measures have to be taken.

- If toxins or pathogenic substances have contaminated the centrifuge or its parts, appropriate disinfection measures have to be taken (refer to the section **Disinfection**).
- Extreme care should be taken with highly corrosive substances which can cause damage and impair the mechanical stability of the rotor. These should only be centrifuged in fully sealed tubes.
- If a hazardous situation occurs, turn off the power supply to the centrifuge and leave the area immediately.

Operating

- Never use the centrifuge if parts of its cover panels are damaged or missing.
- Never start the centrifuge when the centrifuge door is open.
- Do not move the centrifuge while it is running.
- Do not lean on the centrifuge.
- Do not place anything on top of the centrifuge during a run.
- Never open the centrifuge door until the rotor has come to a complete stop and this has been confirmed in the display.
- The emergency door release may be used in emergencies only to recover the samples from the centrifuge, e.g. during a power failure (refer to the section **Mechanical Emergency Door Release**).

  Do not open the centrifuge, while it is running.

In any case of severe mechanical failure, such as rotor or bucket crash, the centrifuge is not aerosol-tight.

In case of rotor failure the centrifuge can be damaged. Leave the room. Inform customer service.

Maintenance

The centrifuge housing is not to be opened by the operator.

Symbols used on the Centrifuge

This symbol refers to general hazards.

CAUTION means that material damage could occur.

WARNING means that injuries or material damage or contamination could occur.

This symbol refers to biological hazards.

Observe the information contained in the instruction manual to keep yourself and your environment safe.

This symbol refers to information on hazards, described within the manual.

This symbol demands to disconnect mains before transporting or servicing the centrifuge.

This symbol demands to check, if the rotor is installed correct by lifting it slightly at the handle. Refer to the section **Rotor Installation**.

This symbol refers to electrical hazards.

Technical Specifications

Technical Data

The technical data of the Fisherbrand GT 1 / 1R Centrifuge is listed in the following table.

Feature	GT 1	GT 1R
Environmental conditions	Use in interior spaces Altitudes of up to 2 000 m above sea level Max. relative humidity 80 % up to 31 °C; decreasing linearly up to 50 % relative humidity at 40 °C.	
Environmental Conditions during Storage and Shipping	Temperature: -10 °C to +50 °C Humidity: 15 % to 85 %	Temperature: -10 °C to +50 °C Humidity: 15 % to 85 %
Permissible Ambient Temperature during Operation	+2 °C to +35 °C	+2 °C to +35 °C
Heat Dissipation[1]	Ventilated	Refrigerated
	230 V	230 V
	1 060 Btu/h;	1 170 Btu/h;
Overvoltage Category	II	II
Pollution Degree	2	2
IP	20	20
Running Time	99 h 59 min 50 sec, hold	99 h 59 min 50 sec, hold
Maximum Speed n_{max}	16 000 rpm	17 850 rpm
Minimum Speed n_{min}	300 rpm	300 rpm
Maximum RCF Value at n_{max}	24 328 x g	30 279 x g
Noise Level at Maximum Speed[1]	< 58 dB (A) (measured with a TX-150 rotor); < 61 dB (A) (measured with a MicroClick™ 24x2 rotor)	< 56 dB (A) (measured with a TX-150 rotor)
Maximum Kinetic Energy	8.12 kJ	10.1 kJ
Temperature Setting Range		-10 °C to +40 °C

Feature	GT 1	GT 1R
Dimensions		
Height (open door / closed door)	660 mm / 310 mm	700 mm / 320 mm
Width	370 mm	460 mm
Depth	490 mm	670 mm
Weight without rotor	35 kg	74 kg

[1] Front Side Measurement, 1 m in front of the instrument at 1.6 m height

Directives, Standards and Guidelines

Region	Directive	Standard
Europe 220-230 V 50 / 60 Hz	2006/42/EC Machinery 2014/35/EU Low Voltage (Protective Goals) 2014/30/EC Electromagnetic Compatibility (EMC) 2011/65/EC RoHS Directive on the Restriction of the use of certain Hazardous Substances in electrical and electronic equipment	EN 61010-1, 2nd Edition IEC 61010-2-020, 2nd Edition EN 61326-1 EN ISO 14971 EN ISO 9001

Mains Supply

The following table contains an overview of the electrical connection data. This data is to be taken into consideration, when selecting the mains connection socket.

Unit	Mains Voltage	Frequency	Rated Current	Power Consumption	Equipment Fuse	Building Fuse
Fisherbrand GT 1 Centrifuge	230 V	50 / 60 Hz	2 A	310 W	5 AT	16 AT
Fisherbrand GT 1R Centrifuge	230 V	50 / 60 Hz	4 A	750 W	15 AT	16 AT

Refrigerant

Order no.	centrifuge	Refrigerant	Quantity	Pressure	GWP	CO2e
75007234	Fisherbrand GT 1R Centrifuge	R-134a	0.315 kg	21 bar	1430	0.45 t

Refrigerant contains fluorinated greenhouse gases in a hermetically sealed system.

Rotor Selection

Various rotors are available to choose from the following:

75005701	TX-150 swinging bucket rotor
75005702	TX-150 round buckets
75005703	TX-150 50mL conical buckets
75005704	TX100S clinical swinging bucket rotor with sealed carriers
75005705	TX100 clinical swinging bucket rotor with carriers
75005706	M10 microplate swinging bucket rotor
75005723	M10 buckets
75005721	M10 sealed buckets
75005600	MT12 microtube swinging bucket rotor
75005709	HIGHConic™ III fixed angle rotor
75003623	CLINIConic™ fixed angle rotor
75005715	MicroClick™ 24x2 microtube rotor
75005719	MicroClick™ 30x2 microtube rotor
75005720	8x8 PCR Strip rotor
75003694	8 x 50 mL Individually Sealed rotor (only usable in the Centrifuge GT 1R)
75005765	MicroClick™ 18x5 microtube rotor (only usable in the Centrifuge GT 1R)
75003602	Microliter 48x2 microtube rotor

For further details on rotor use and safety, additional accessories, adapters and spare parts, refer to the rotor manual.

For more information visit our website at fishersci.com

Transport and Set Up

Before Setting Up

1. Check the centrifuge and the packaging for any shipping damage. Inform Fisher Scientific Customer service immediately if any damage is discovered.
2. Remove the packaging.
3. Check, if the items supplied are complete. Refer to the section **Items Supplied**. If the items supplied are incomplete, please contact Fisher Scientific.

Location

The centrifuge is only to be operated indoors.

The set-up location must fulfill the following requirements:

- A safety zone of at least 30 cm must be maintained around the centrifuge. People and hazardous substances must be kept out of this safety zone while centrifuging.
- The supporting structure must be stable and free of resonance.
- The supporting structure must be suitable for horizontal setup of the centrifuge.
- The centrifuge is not to be exposed to heat and strong sunlight.

WARNING: UV rays reduce the stability of plastics.

Do not subject the centrifuge, rotors and plastic accessories to direct sunlight.

- The set-up location must be well-ventilated at all times.

Transporting

WARNING: Always lift the centrifuge from both sides. Never lift the centrifuge by its front panel, its back panel or at its door.

Always remove the rotor before moving the centrifuge.

- To prevent possible injuries, at least two people should lift and carry the centrifuge by holding it at the bottom from opposite sides.

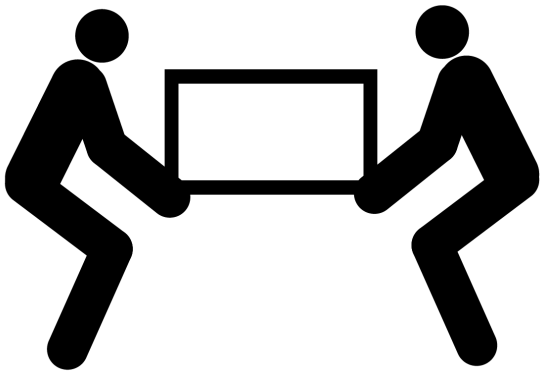

Figure 1. Lifting the centrifuge at both sides.

- Transport the centrifuge and accessories upright within the associated packaging, if possible.

Note: Store the original centrifuge packaging. Contact a shipping company or the customer service for the transport. Always remove the rotor before moving the centrifuge. If you do not remove the rotor you might damage the centrifuge drive or centrifuge spindle.

Leveling

CAUTION: If the centrifuge isn't leveled, imbalances can occur and the centrifuge can be damaged.

Do not place anything under the centrifuge feet to level the centrifuge.

The centrifuge must be placed on horizontal and level supporting structures or benching.

Horizontal level must be checked when moving the centrifuge to a new location.

Mains Connection

Note: Plug the centrifuge into grounded electrical sockets only.

1. Turn off the power supply switch.

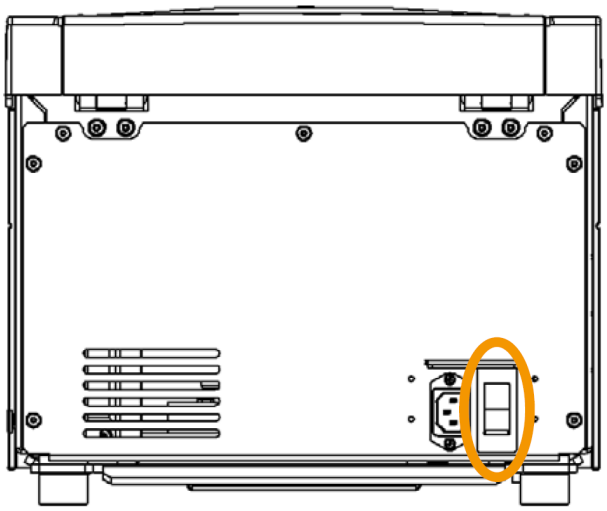

Figure 2. Power supply switch on the backside of the Centrifuge GT 1

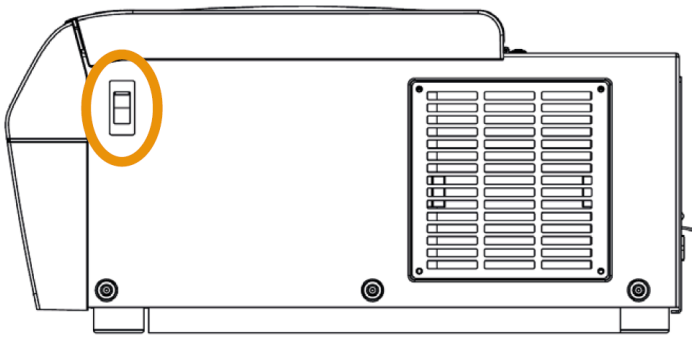

Figure 3. Power supply switch on the right side of the Centrifuge GT 1R

2. Check whether the cable complies with the safety standards of your country.
3. Make sure that the voltage and frequency correspond to the figures on the rating plate.
4. Establish the connection to the power supply with the connecting cable.

Storage

WARNING: When removing the centrifuge and accessories from use if necessary clean, disinfect or decontaminate the entire system. In doubt contact the Fisher Scientific customer service.

- Before storing the centrifuge and the accessories, it must be cleaned and if necessary disinfected and decontaminated.

  Centrifuge, rotors, buckets and accessories have to be thoroughly dried before storage.
- Store the centrifuge in a clean, dust-free location.
- Be sure to place the centrifuge on its feet.
- Avoid direct sunlight.

Shipping

WARNING: Before shipping the centrifuge and accessories you have to clean and if necessary disinfect or decontaminate the entire system. In doubt contact the Fisher Scientific customer service.

Before shipping the centrifuge please bear the following in mind:

- The centrifuge must be clean and decontaminated.
- The decontamination must be confirmed in a decontamination certificate. Contact customer service for more details.

Control Panel

Control Panel

The control panel contains the keys and displays of the centrifuge (only the power switch is located on the right side (Centrifuge GT 1R) or on the backside (Centrifuge GT 1) of the device).

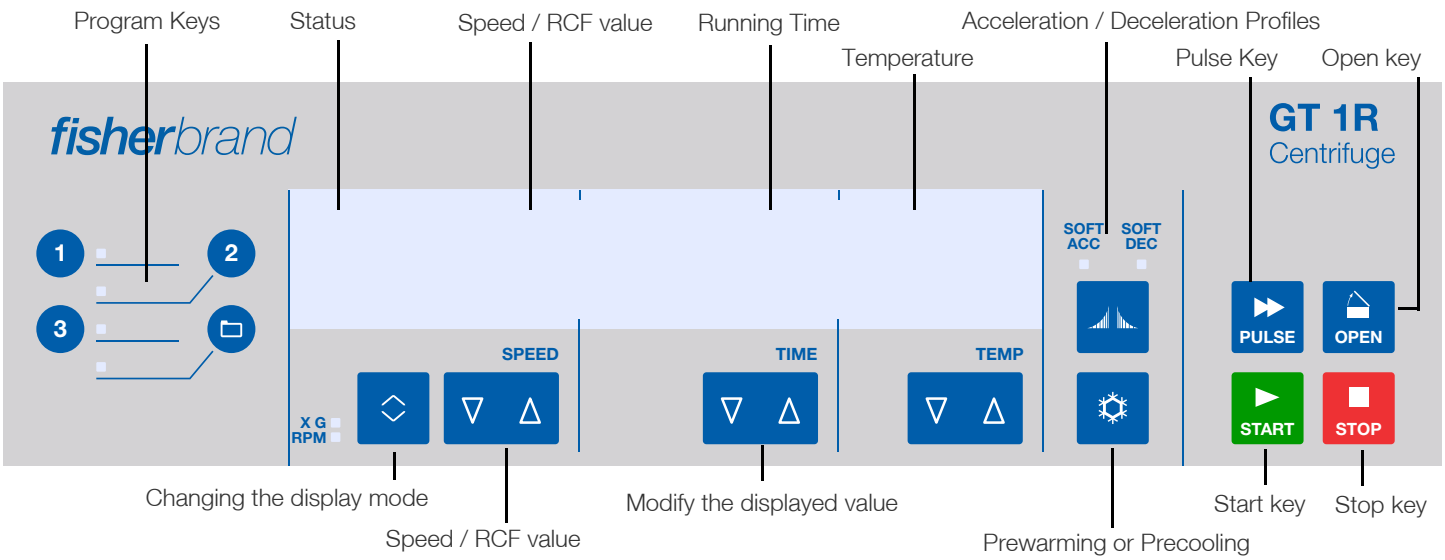

Keys

The keys allow user intervention for controlling the operating mode as follows:

Key		Display contents
START	**Start Key**	**Press the START key to start a centrifugation run or to accept the current settings**
STOP	**Stop Key**	**Press the STOP key to manually end the centrifugation run**
OPEN	**Open Key**	**Press the OPEN key to activate the automatic door release (possible only when device is switched on and when the rotor is fully stopped). Refer to the section Mechanical Emergency Door Release**
PULSE	**Pulse Key**	**Press the PULSE key to immediately start the centrifugation run and accelerate up to the maximal permissible end speed (depending on the used rotor). Releasing the key initiates a stopping process at the highest braking curves**
▽ △	**Arrow Keys**	**Use these keys in order to modify the displayed value**
	Snowflake Key	**Press the snow symbol key for prewarming or precooling the centrifuge**
	Toggle Key	**Use the Change key to change the display mode (Speed / RCF value)**

Operation

Note: Only display pictures of the Centrifuge GT 1R are shown. The display of the Centrifuge GT 1 is the same, except missing the details for temperature.

Switching on the Centrifuge

1. Turn on the power switch on the back of the device.

   The device performs a self-check of its software.

   a. When the centrifuge door is closed the display shows:

READY		
0	00:00	23

   The speed and time displays read 0. The current temperature inside the rotor chamber is displayed.

   b. When the centrifuge door is open the display shows:

DOOR OPEN		
8000	HOLD	10

   The speed and time displays show the preset values; the set temperature inside the rotor chamber is displayed.

Open the Centrifuge Door

Press the OPEN key.

Close the Centrifuge Door

WARNING: Do not reach into the gap between the centrifuge door and the housing.

Use the emergency release only for malfunctions and power failures (refer to the section **Mechanical Emergency Door Release**).

Ensure that the centrifuge platform is clear from objects.

Keep hands and objects well clear of the underside and side of the centrifuge door when closing.

Close the centrifuge door by pressing down on it lightly in the middle or on both sides of it. The centrifuge door mechanism will click and lock in place. Lids should not be slammed as excessive force may cause damage or disrupt samples.

Note: The centrifuge door should audibly click into place.

Rotor Installation

The approved rotors for the Centrifuge GT 1 / 1R are listed in section **Rotor Selection**. Use only the rotors from this list in the centrifuge.Permitted accessories are listed in the rotor manuals.

CAUTION: Unapproved or incorrectly combined accessories can cause serious damage to the centrifuge.

The centrifuge is equipped with an Auto-Lock locking system.

This system is used to automatically lock the rotor to the centrifuge spindle. The rotor does not have to be bolted on to the centrifuge spindle.

Proceed as follows:

1. Open the centrifuge door and if necessary remove any dust, foreign objects or residue from the chamber.

   Auto-Lock and O-Ring must be clean and undamaged.

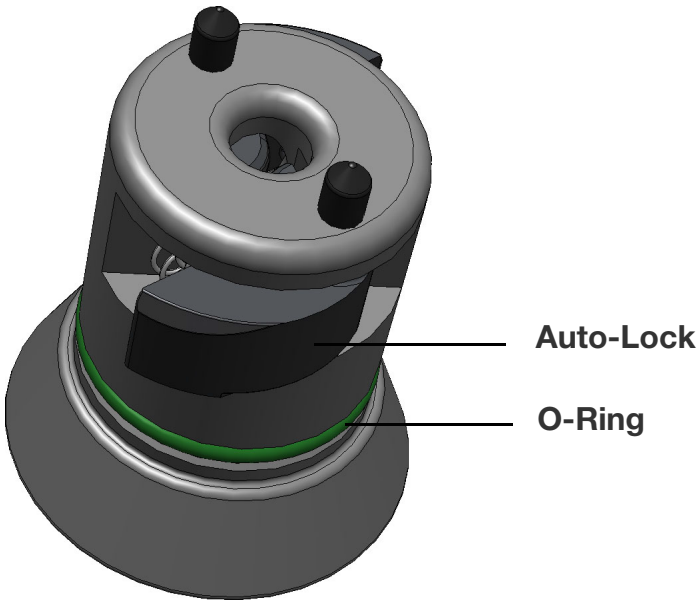

Figure 4. Auto-Lock

2. Place the rotor over the centrifuge spindle and let it slide slowly down the centrifuge spindle. If necessary a light push may be required to ensure connection.

   The rotor clicks automatically into place.

   CAUTION: Do not force the rotor onto the centrifuge spindle.

   If the rotor is very light, then it may be necessary to press it onto the centrifuge spindle with little pressure.

3. Check if the rotor is properly installed by lifting it slightly on the handle or from beneath the rotor. If the rotor can be pulled up, then it must be reconnected to the centrifuge spindle.

   WARNING: If the rotor cannot be properly locked in place after several attempts, then the Auto-Lock is defective and you are not permitted to operate the rotor.

   Check for any damage to the rotor and the spindle. Damaged rotors must not be used.

   Keep the centrifuge spindle area of the rotor clear of objects.

   If in doubt, call Fisher Scientific Customer Service.

   CAUTION: Check that the rotor is properly locked on the centrifuge spindle before each use by pulling it at its handle.

4. If available close the rotor with the rotor lid.
5. Check the according rotor manual for further details on requirements and methods of closure.

   CAUTION: Be sure to check all sealing before starting any aerosol-tight applications.

   See the information in the rotor instruction manual.

6. Close the centrifuge door.

Acceleration / Deceleration Rates

The Fisherbrand GT 1 / 1R Centrifuge offers you 2 profiles: standard and soft. The setting is displayed above the ACCELERATION / DECELERATION key .

Press the ACCELERATION / DECELERATION key to cycle through and set the available profiles. The LEDs show

the chosen settings. The last profile is saved, if you restart the centrifuge.

LED Light Settings	Description
OFF	**Acceleration and Deceleration with max. Power = Standard**
SOFT ACC	**Acceleration = Soft**
SOFT DEC	**Deceleration = Soft**
SOFT ACC and SOFT DEC	**Acceleration and Deceleration = Soft**

Pre-Selecting Speed / RCF

RPM stands for Revolutions Per Minute.

RCF stands for Relative Centrifugal Force and allows better transfer of protocols between centrifuges and rotors of differing size.

Ensure that the rpm or RCF is correctly set.

1. Press the TOGGLE key below the SPEED display to cycle through the RPM / RCF selection.

   The LED light will indicate if “RPM” or “RCF” is selected.

   RPM / RCF can be viewed during a run by pressing the toggle button.

2. Enter the desired value by holding the arrow keys below SPEED in the corresponding direction, until the desired value shows. First RPM / RCF will change in steps of 10. Holding a key pressed will change the runtime then in steps of 100 and then in steps of 1000.

   Press the START key to accept or wait 4 seconds until the centrifuge automatically saves the chosen values. Moving to setting time or temperature also automatically stores the set value.

Note: The minimum motor speed is 300 rpm. Any extremely low rcf settings will be automatically increased to the minimum rcf at 300 rpm.

Explanation of RCF-Value

The Relative Centrifugal Force (RCF) is given as a multiple of the force of gravity g. It is a unit less numerical value which is used to compare the separation or sedimentation capacity of various centrifuges, since it is independent of the type of device. Only the centrifuging radius and the speed are used for its calculation:

$$RCF = 11.18 \times \left(\frac{n}{1000}\right)^2 \times r$$

r = centrifuging radius in cm

n = rotational speed in rpm

The maximum RCF value is related to the maximum radius of the tube opening.

Remember that this value is reduced depending on the tubes and adapters used.

This can be accounted for in the calculation above if required.

Running Time Pre-Selection

1. Press the key. This allows to change the set time using the arrow keys until the desired time is displayed. First runtime will change in steps of 10 second. Holding a key pressed will change the runtime by steps of single minutes, followed by steps of 10 minutes, followed by steps of single hours and at least by steps of 10 hours. This will continue until the limit of 99 hours and 59 minutes is reached.

   Enter the desired runtime in hh:mm or mm:ss.

	Min:Sec
TIMER	00:30

2. Press the START key to accept or wait 4 seconds until the centrifuge automatically saves the chosen values. Moving to setting speed / RCF or temperature also automatically stores the set value.

Continuous Operation

1. Press either arrow keys until HOLD is displayed.

2. Press the START key to accept or wait 4 seconds until the centrifuge automatically saves the chosen values. During continuous operation, the centrifuge will continue running until you stop it manually.

Preselecting the Temperature

You can preselect temperatures between -10 °C and +40 °C.

To set the temperature, proceed as follows:

1. Press the TEMPERATURE arrow keys. This allows to change the set temperature using the arrow keys until

the desired temperature is displayed. Temperature will change in steps of single degrees celsius.

	°C
Temperature	10

The temperature cannot be adapted until the rotor has been positively identified; the speed display will then show END. When the rotor is not recognized (centrifuge door closed and START key [START] not yet pressed, speed display “0”), the centrifuge ensures that the sample cannot freeze regardless of the rotor being used.

Pre-warming or Pre-cooling the Centrifuge

Ensure the rotor, buckets and accessories are correctly in place and securely attached in the chamber. For setting the pretemp value for the centrifuge proceed as follows:

1. Press the SNOWFLAKE [❄] key in order to open the temperature selection menu.

   The display shows the message “PreTemp”.

2. Enter the desired value by pressing the [▽ △] key repeatedly, until the desired value shows.

	°C
Pre-Temp	27

3. Press the START key [START].

Pre-Warming		°C
6548	00:30	17

4. The centrifuge motor will start and a specific speed defined by the rotor. This improves air circulation within the chamber, resulting in improved temperature control throughout the chamber and rotor. The rotor chamber is cooled down or heated up to the preset temperature.
5. When the set temperature is reached, the centrifuge will beep and continue to hold the temperature.
6. Press the STOP key [STOP] to end the pre-warming or pre-cooling.The display shows the current temperature inside the rotor chamber.

Programs

The Fisherbrand GT 1 Centrifuge is able to save up to 4 programs; the Fisherbrand GT 1R Centrifuge is able to save up to 99 programs. It is only possible to save a program if the centrifuge is in standstill. Loading or saving of programs is not possible if the centrifuge is spinning.

Saving a Program

Modify the speed, time and temperature to the desired setting.

For Direct Access Programs 1, 2, 3:

Press and hold the desired program key 1, 2 or 3 for 4 seconds.

For Programs 4-99:

1. Press the folder key for 4 seconds. Use the SPEED arrow key [▽ △], to scroll through until the desired number is selected.
2. Press the START key [START] to confirm.
3. The program can now be named using up to 12 alphanumeric characters. Use the SPEED arrow key [▽ △] to scroll through the characters. Use the TIME arrow keys [▽ △] to move left or right.
4. Press the START key [START] to confirm and save the program.

To abort at any point press the STOP key [STOP].

Selecting a Program

For Direct Access Programs 1, 2, 3

Press one of the direct access program keys 1, 2, 3.

For Programs 4-99

Press the folder key. Use the SPEED arrow keys [▽ △] to scroll through until the desired program is selected.

Centrifugation

Maximum Loading

WARNING: Injuries with fatal consequences can occur when using substance mixtures with a higher density than 1.2 g/cm^3 at maximum speed.

Rotors can run at high speeds. Each rotor is specifically designed to run at its maximum speed with a defined load. For further details refer to the rotor manual supplied with the rotor.

The rotors are designed to work with substance mixtures with a density of up to 1.2 g/ml. Above this density or if total load is above the maximum weight the following steps should be taken:

- Reduce the fill level.
- Reduce the speed.

Use the formula:

$$n_{adm} = n_{max} \sqrt{\frac{Maximum\ permissible\ Load}{Effective\ Load}}$$

n_{adm} = admissible speed

n_{max} = maximum speed

Once the rotor has been properly installed, the main switch turned on and the centrifuge door closed, you may start centrifuging.

Use of Tubes and Consumables

Care should be taken to ensure that the tubes and bottles used in the centrifuge are:

- Rated to or above the selected rcf to be spun at
- They are being used at or above there minimum fill volume
- They are not being used above their design life (age or number of runs)
- They are inspected for damage

Refer to the manufacturers data sheets for further information.

Starting Centrifuge Program

Press the START key ▶ START on the control panel. The centrifuge accelerates to the pre-set speed with the time display active.

If the speed setting is higher than the maximum permissible speed or RCF-value for the particular rotor, then after starting the display will show the message “Limit” – followed by the maximum RPM- or RCF-value of the inserted rotor once the centrifuge has been started.

Within 10 seconds of the error message it is possible to accept the highest RPM / RCF of the inserted rotor by pressing START key ▶ START. The centrifuge will then continue run for the set time and at the set temperature. If no action is taken within 10 seconds, the centrifuge will continue to decelerate. A new speed setting can be selected using the SPEED arrow keys ▽ △ and has to be confirmed by pressing the START key ▶ START.

If no action is taken, the centrifuge will decelerate until stop, then the lid should be opened and the rotor checked.

Imbalance Indicator

The centrifuge is fitted with an imbalance detector, to ensure safety. If an imbalance is detected at speeds higher than approx. 300 rpm an error message “Imbalance load” will be displayed.

Imbalance at high speed may indicate a tube breakage or leak or rotor crash. Therefore additional care should be taken depending on the samples loaded.

The run will terminate.

Once the run is complete, the rotor and load should be checked, ensuring that all buckets are greased and can swing free and that the tubes are balanced by following the rotor instruction manual. For information on troubleshooting, refer to the section **Troubleshooting by Guide**.

Stopping the Centrifugation Run

With Pre-Set Running Time

If the run time is preset, the centrifuge will run at the selected speed until the desired run time is reached. It will then automatically decelerate and stop. Once stopped “RUN COMPLETED” will be displayed and if selected the display will flash. Access to the chamber and rotor can be gained by pressing the OPEN key ⏏ OPEN. If selected the door will open automatically.

You can also stop the centrifuging program manually at any time by pressing the STOP key ■ STOP.

Continuous Operation

If you selected continuous operation (refer to the section **Continuous Operation**), you will have to stop the centrifuge manually. Press the STOP key ■ STOP on the control panel. The centrifuge will be decelerated at the set rate. The message “RUN COMPLETED” will be displayed. After pressing the OPEN key ⏏ OPEN, the centrifuge door will open and you can remove the centrifuged samples.

Short-term Centrifugation

For quick centrifugation, the Centrifuge GT 1 / 1R has a PULSE-function.

By holding down the PULSE key PULSE, spinning will start at maximum acceleration rate, continue at maximum rotor speed until the key is released. The rotor then decelerates at maximum rate. Preset values for acceleration, deceleration and speed or RCF are disregarded for the PULSE function.

The centrifuge accelerates and brakes at maximum power. Any rpm or RCF entered beforehand is overridden.

Note: The centrifuge accelerates to maximum speed, according to the rotor used.

Check carefully whether you have to maintain a certain speed for your application.

During the acceleration process, time is counted forwards in seconds. The reading stays displayed until the centrifuge door is opened.

Removing the Rotor

To remove the rotor, proceed as follows:

1. Open the centrifuge door.
2. Grab the rotor handle and fully depress the Auto-Lock button. At the same time, pull the rotor vertically upwards and remove it from the centrifuge spindle. Make sure not to tilt the rotor while doing this.

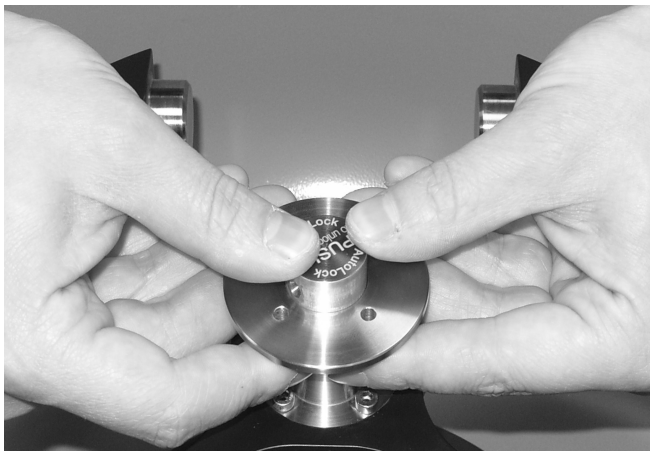

Figure 5. Removing the rotor

Aerosol-Tight Rotors

For your protection when using an aerosol tight lid the rotor should only be removed with the lid closed.

Note: Rotors supplied with a lid for aerosol-tight applications come with a mandrel, which belongs to the Auto-Lock. Be sure not to place the lid onto this mandrel to prevent it from being damaged.

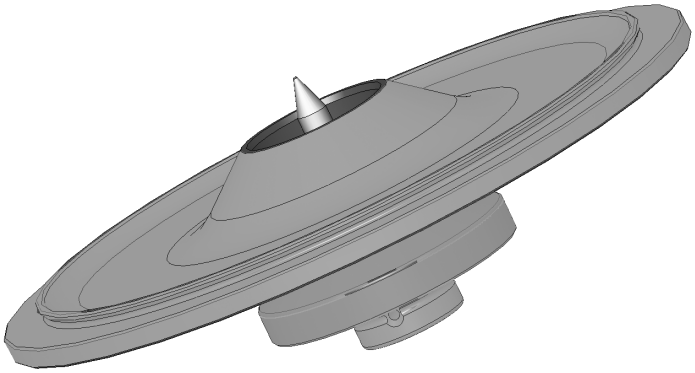

Figure 6. Auto-Lock lid for aerosol-tight rotors

CAUTION: Skin can be pierced by sharp mandrel tip.

Do not touch the mandrel.

Switch off Centrifuge

To turn off the centrifuge push the mains switch to “0”.

System Menu

To get into the system menu, press and hold any key on the front panel turning on the centrifuge. Keep this key depressed until system menu appears in display. Navigate through the system menu using the TIME arrow keys ▽ △.

Flowchart System Menu

The system menu can be navigated using the SPEED arrow keys ▽ △. The shown entry can be changed using the TIME ▽ △ and TEMP arrow keys ▽ △. Press the START key START to save this edit and quit the system menu. Press the STOP key STOP to quit the system menu.

Values shown at some entries in the picture below are only examples.

Note: A total number of cycles completed on the centrifuge is counted, since installation or a new main board was installed. Cycle counts should be periodically recorded to help with the identification of the total number of runs a rotor has completed.

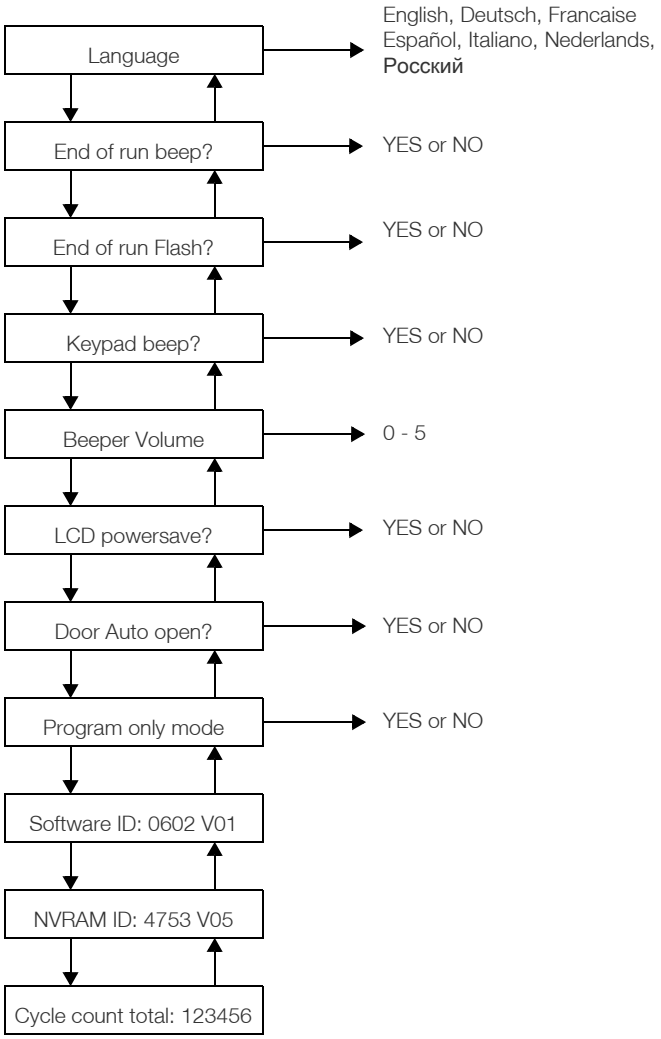

Maintenance and Care

Cleaning Intervals

For the sake of personal, environmental, and material protection, it is your duty to clean and if necessary disinfect the centrifuge on a regular basis.

Maintenance	Recommended Interval
Rotor Chamber (Bowl)	**Daily or when polluted**
Rotor	**Daily or when polluted**
Accessories	**Daily or when polluted**
Filter Mat (Capacitor)	**Every six months by a service technician.**
Cabinet	**Once per month**
Ventilation Holes	**Every six months**

Basics

CAUTION: Not rated procedures or agents could deteriorate the materials of the centrifuge and lead to malfunction.

Refrain from using any other cleaning or decontamination procedure than those recommended here, if you are not entirely sure that the intended procedure is safe for the equipment.

Use only approved cleansers.

If in doubt, contact Fisher Scientific.

- Use warm water with a neutral detergent that is suitable for use with the materials. If in doubt contact the manufacturer of the cleaning agents.
- Never use caustic cleaning agents such as soap suds, phosphoric acid, bleaching solutions or scrubbing powder.
- Remove rotor and clean bowl with a small amount of cleaning agent, applied to a clean cloth.
- Use a soft brush without metal bristles to remove stubborn residue.

  Afterwards rinse with a small amount of distilled water and remove any excess with absorbent towels.
- Use only disinfectants with a pH of 6 to 8.

Rotor and Accessories Inspection

After thoroughly cleaning rotors, they should be inspected for damage, wear and corrosion.

Metal Parts

Ensure that the black protective coating is complete. It can be removed through wear and chemical attack and can lead to unseen corrosions. Any signs of corrosions, such as rust or white / metalic pitting, the rotor or accessories should be immediately removed from service. Particular attention should be taken with the bottom of buckets on swing out rotors and tube cavities on fixed angle rotors.

Plastic Parts

Check for signs plastic crazing, fading, bruising or cracking.

CAUTION: Do not run any rotor or accessories with sign of damage.

Ensure that the rotor, buckets and accessories are within the service life and number of cycles.

It is recommend that you have rotors and accessories inspected yearly as part of your routine service to ensure safety.

Cleaning

CAUTION: Before using any cleaning methods except those recommended by the manufacturer, users should check with the manufacturer of the cleaning agents that the proposed method will not damage the equipment.

Clean as follows:

1. Clean rotor, buckets and accessories outside of the centrifuge bowl.
2. Separate all rotors, buckets, lids, adapters and tubes to allow thorough cleaning.
3. Rinse rotor and all accessories with warm water and a neutral detergent that is suitable for use with the

materials. If in doubt contact the manufacturer of the cleaning agents. Ensure grease on rotor trunnions (pivot point for swinging buckets) is cleaned.

4. Use a soft brush without metal bristles to remove stubborn residue.
5. Rinse rotor and all accessories with distilled water.
6. Place the rotors on a plastic grate with their cavities pointing down, to allow to fully drain and dry.
7. Dry all of the rotors and accessories after cleaning with a cloth or in a warm air cabinet at a maximum temperature of 50 °C. If drying boxes are used, the temperature must never exceed 50 °C, since higher temperatures could damage the material and shorten the lifetime of the parts.

   Once clean and dry, inspect the rotor and accessories.

   After cleaning, treat the entire surface of aluminum parts including the cavities with corrosion protection oil (70009824).

   Treat the bolt of the swing out rotor with bolt grease (75003786).

CAUTION: Drive and door lock can be damaged by entering liquids. Do not allow liquids, especially organic solvents, to get on the drive shaft, the drive bearings or the centrifuge door locks.

Organic solvents break down the grease in the motor bearing. The drive shaft could lock up.

Cleaning the Filter Mat

It is recommended that you clean the filter mat (50141352) regularly every six weeks. Depending on the environmental conditions it may be necessary to clean the filter mat more often.

How to clean the filter mat:

1. Unscrew the ventilation grid placed on the right side of the centrifuge.
2. Remove the ventilation grid.
3. Remove the filter mat.
4. Clean the filter mat by tapping off the dust. The filter mat can be rinsed with water, if needed. Dry the filter mat before using it again.

   Note: Moisture can damage electronics and lead to additional damages at the centrifuge. Only use dry filter mats.
5. Place the filter mat back on the capacitor.
6. Screw the ventilation grid onto the centrifuge.

Disinfection

WARNING: Hazardous infection is possible when touching the contaminated rotor and centrifuge parts. Infectious material can get into the centrifuge when a tube breaks or as a result of spills.

In case of contamination, make sure that others are not at risk.

Disinfect the affected parts immediately.

CAUTION: Before Equipment can be damaged by inappropriate disinfection methods or agents.

Before using any cleaning or disinfection methods except those recommended by the manufacturer, users should check with the manufacturer that the proposed method will not damage the equipment.

Observe the safety precautions and handling instructions for the cleaning agents used.

The rotor chamber and the rotor should be treated preferably with a neutral disinfectant.

Contact the Service Department of Fisher Scientific for questions regarding the use of other disinfectants. For details, refer to the section **Basics**.

Disinfect as follows:

1. Disinfect rotor, buckets and accessories outside of the centrifuge bowl.
2. Separate all rotors, buckets, lids, adapters and tubes to allow thorough disinfection.
3. Treat the rotor and accessories according to the instructions for the disinfectant. Adhere strictly to the given application times.

   Be sure the disinfectant can drain off the rotor.
4. Rinse the rotor and accessories thoroughly with water and then rub down.
5. Place the rotors on a plastic grate with their cavities pointing down, to allow to fully drain and dry.
6. Dispose the disinfectant according to the applicable guidelines.
7. Clean the rotor after disinfecting as described in the section **Cleaning**.

Decontamination

WARNING: Radiation is possible when touching the contaminated rotor and centrifuge parts. Radioactive material can get into the centrifuge when a tube breaks or as a result of spills.

In case of contamination, make sure that others are not at risk.

Decontaminate the affected parts immediately.

CAUTION: Equipment can be damaged by inappropriate decontamination methods or agents.

Before using any cleaning or decontamination methods except those recommended by the manufacturer, users should check with the manufacturer that the proposed method will not damage the equipment.

Observe the safety precautions and handling instructions for the cleaning agents used.

For general radioactive decontamination use a solution of equal parts of 70 % ethanol, 10 % SDS (Sodium Dodecyl Sulfate) and water.

Decontaminate as follows:

1. Decontaminate rotor, buckets and accessories outside of the centrifuge bowl.
2. Separate all rotors, buckets, lids, adapters and tubes to allow thorough decontamination.
3. Treat the rotor and accessories according to the instructions for the decontamination solution. Adhere strictly to the given application times.

   Be sure the decontamination solution can drain off the rotor.
4. Rinse the rotor first with ethanol and then with deionized water.

   Adhere strictly to the given application times.

   Be sure the decontamination solution can drain off the rotor.
5. Rinse the rotor and accessories thoroughly with water.
6. Place the rotors on a plastic grate with their cavities pointing down, to allow to fully drain and dry.
7. Dispose of the decontamination solution according to the applicable guidelines.
8. Clean the rotor after disinfecting as described in the section **Cleaning**.

Autoclaving

- Before autoclaving clean rotor and accessories as described above.
- Place the rotor on a flat surface.
  - Rotors and adapter can be autoclaved at 121 °C.
  - The maximum permissible autoclave cycle is 20 minutes at 121 °C.

Clean the rotor before autoclaving and rinse it with distilled water. Remove all accessories (tubes, adapters) from the rotor.

Place the rotor on a flat surface.

Note: No chemical additives are permitted in the steam.

CAUTION: Never exceed the permitted temperature and duration when autoclaving.

Maintenance and Repair Services

The manufacturer recommends having the centrifuge and accessories serviced once in a year by an authorized service technician. The service technician checks the following

- The electrical equipment
- The suitability of set-up site
- The centrifuge door lock and safety system
- The rotor
- The fixation of rotor and centrifuge spindle
- The protective casing

Before service, centrifuge and rotors should be thoroughly cleaned and decontaminated to ensure full and safe inspection can be completed.

Unity™ Lab Services offers inspection and service contracts for this work. The cost of any necessary repairs are covered under the warranty. Purchase a service contract to cover any services after the warranty has expired.

This is only valid if the centrifuge has only been maintained by an authorized service technician.

Shipping and Disposal

WARNING: When removing the centrifuge and accessories from use for disposal you have to clean and if necessary disinfect or decontaminate the entire system. In doubt contact the Fisher Scientific customer service.

For the disposal of the centrifuge mind the regulations in your country. Contact the Fisher Scientific Customer Service for the disposal of the centrifuge. For contact information check the back page of this manual or visit www.thermofisher.com/centrifuge

For the countries of the European Union the disposal is regulated by the European Union's Waste Electrical & Electronic Equipment (WEEE) Directive 2012/19/ EU.

Mind the information on transport and shipping. Refer to the section **Transporting** and **Shipping**.

Troubleshooting

Mechanical Emergency Door Release

During a power failure, you will not be able to open the centrifuge door with the regular electric lid release.
A mechanical override is provided to allow sample recovery in the case of an emergency. This is only to be used in emergencies and after the rotor has come to a complete stop.

WARNING: Spinning rotor can cause serious injuries when touched. In case of power outage the rotor can still be spinning.

Do not open the centrifuge before the rotor has stopped. Do not touch the spinning rotor. Do not brake the rotor using hands or other tools.

Always wait until the rotor has come to a stop without braking. The brake does not work when there is no current. The braking process lasts much longer than usual.

Proceed as follows:

1. Make sure the rotor has stopped (view port in the centrifuge door).
2. Pull out the power supply plug. Keep the centrifuge horizontal at all times.
3. Pull the release cord.
   a. GT 1

      On the right side of the housing is one white plastic plug which can be removed from the plate with a small flat screwdriver. Once the plug is removed it will expose the release cord.

      Pull the release cord attached to it to trigger the mechanical door release. The centrifuge door will open and the samples can be removed. Open the centrifuge door.

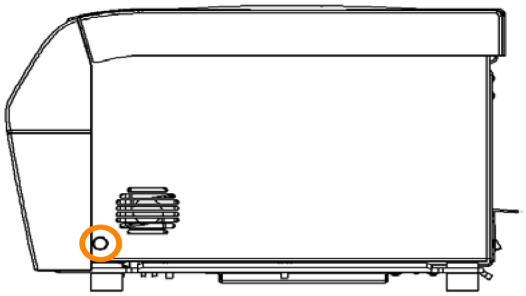

Figure 7. Mechanical Emergency Door Release located on the right side

   b. GT 1R

      At the bottom of the housing is one white plastic plug which can be removed from the plate with a small flat screwdriver. It is located below the front side of the centrifuge. Once the plug is removed it will expose the release cord.

      Pull the release cord attached to it to trigger the mechanical door release. The centrifuge door will open and the samples can be removed. Open the centrifuge door.

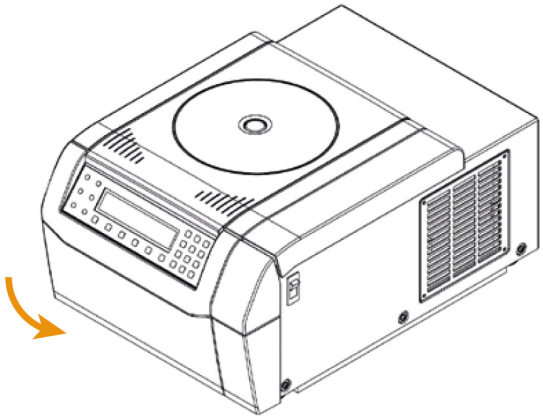

Figure 8. Below front side

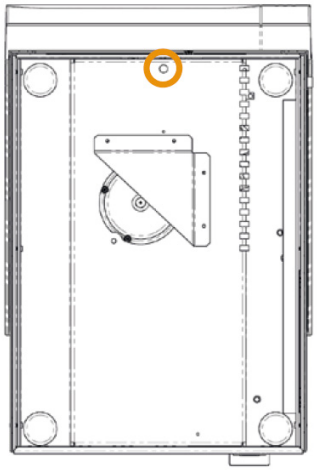

Figure 9. Mechanical Emergency Door Release on the downside

4. Push the cord back into the centrifuge and mount the plug.

Reconnect the centrifuge once the power has been restored. Switch ON the centrifuge. Press the OPEN key OPEN to have the centrifuge door locks operative again.

Troubleshooting by Guide

If problems occur other than those listed in this table, the authorized customer service representative must be contacted.

Error number	Error message	Troubleshooting
E-002; E-005; E-008; E-010; E-011; E-012; E-015; E-016; E-034; E-036; E-041; E-048; E-050; E-051; E-052; E-053; E-054; E-072; E-077; E-101; E-104	Read Manual	Restart the centrifuge. If the error message appears again, contact Unity Lab Services.
E-031	Temp High!	CAUTION Hot metal parts! Check if the centrifuge is accessible. Be sure, that the room temperature is within the limits. Let the centrifuge cool down for 15 minutes. Be sure there is no condensed water in the rotor chamber. If the error message appears again, contact Unity Lab Services.
E-017; E-020; E-021; E-022; E-023; E-078; E-079; E-080; E-081	Read Manual	Wait until the rotor has stopped. Check if the rotor is qualified for the Centrifuge GT 1 / 1R (refer to the section Rotor Selection). Check, if the bottom of the rotor is damaged and if the rotor is placed on the Auto-Lock correctly. If the error message appears again, contact Unity Lab Services.
E-019	Rotor Unknown	Restart the centrifuge. Check if the rotor is qualified for the Centrifuge GT 1 / 1R (refer to the section Rotor Selection). If the error message appears again, contact Unity Lab Services.
E-025; E-027	Read Manual	Check, if the centrifuge door is blocked. Restart the centrifuge. If the error message appears again, contact Unity Lab Services.
E-029; E-045	Read Manual	Check if a rotor is installed. Check if the rotor is qualified for the Centrifuge GT 1 / 1R (refer to the section Rotor Selection). Restart the centrifuge. If the error message appears again, contact Unity Lab Services.

Error number	Error message	Troubleshooting
E-030	Power Failure	Check the power supply of the centrifuge. Make sure not to operate too many devices at one power source. Let the centrifuge cool down for 15 minutes. If the error message appears again, contact Unity Lab Services.
E-098	Imbalance Load	Check the load placed in the rotor. Check that the rotor cross bolts are greased well. Restart the centrifuge. If the error message appears again, contact Unity Lab Services.
E-060	Temp Low!	CAUTION Icy metal parts! Restart the centrifuge. If the error message appears again, contact Unity Lab Services.
E-046	Door Open!	Restart the centrifuge. If the error message appears again, contact Unity Lab Services.
E-099	Set Speed Too High	The installed rotor is not rated for the programmed speed. Check the programmed speed.

When to contact Customer Service

If you need to contact customer service, provide the order no. and the serial no. of your centrifuge. This information can be found on the nameplate at the back near the inlet for the power supply cable.

In addition the customer service also needs the Software ID and the NVRAM ID. Both are available in the system menu.

Chemical Compatibility Chart

CHEMICAL	MATERIAL ALUMINUM	ANODIC COATING for ALUMINUM	BUNA N	CELLULOSE ACETATE BUTYRATE	POLYURETHANE ROTOR PAINT	COMPOSITE Carbon Fiber/Epoxy	DELRIN™	ETHYLENE PROPYLENE	GLASS	NEOPRENE	NORYL	NYLON™	PET*, POLYCLEAR™, CLEARCRIMP™,CCCLEARCRIMP™	POLYALLOMER	POLYCARBONATE	POLYESTER, GLASS THERMOSET	POLYTHERMIDE	POLYRTHYLENE	POLYPROPYLENE	POLYSULFONE	POLYVINYL CHLORIDE	RULON A™, TEFLON™	SILICONE RUBBER	STAINLESS STEEL	TITANIUM	TYGON™	VITON™
2-mercaptoetha-nol	S	S	U	-	S	M	S	-	S	U	S	S	U	S	S	-	S	S	S	S	U	S	S	S	S	S	S
Acetaldehyde	S	-	U	U	-	-	-	M	-	U	-	-	-	M	U	U	U	M	M	-	M	S	U	-	S	-	U
Acetone	M	S	U	U	S	U	M	S	S	U	U	S	U	S	U	U	U	S	S	U	U	S	M	M	S	U	U
Acetonitrile	S	S	U	-	S	M	S	-	S	S	U	S	U	M	U	U	-	S	M	U	U	S	S	S	S	U	U
Alconox	U	U	S	-	S	S	S	-	S	S	S	S	S	S	M	S	S	S	S	S	S	S	S	S	S	S	U
Allyl Alcohol	-	-	-	U	-	-	S	-	-	-	-	S	-	S	S	M	S	S	S	-	M	S	-	-	S	-	-
Aluminium Chlo-ride	U	U	S	S	S	S	U	S	S	S	S	M	S	S	S	S	-	S	S	S	S	S	M	U	U	S	S
Formic Acid (100 %)	-	S	M	U	-	-	U	-	-	-	-	U	-	S	M	U	U	S	S	-	U	S	-	U	S	-	U
Ammonium Ace-tate	S	S	U	-	S	S	S	-	S	S	S	S	S	S	S	U	-	S	S	S	S	S	S	S	S	S	S
Ammonium Carbonate	M	S	U	S	S	S	S	S	S	S	S	S	S	S	U	U	-	S	S	S	S	S	S	M	S	S	S
Ammonium Hydroxide (10 %)	U	U	S	U	S	S	M	S	S	S	S	S	-	S	U	M	S	S	S	S	S	S	S	S	S	M	S
Ammonium Hydroxide (28 %)	U	U	S	U	S	U	M	S	S	S	S	S	U	S	U	M	S	S	S	S	S	S	S	S	S	M	S
Ammonium Hydroxide (conc.)	U	U	U	U	S	U	M	S	-	S	-	S	U	S	U	U	S	S	S	-	M	S	S	S	S	-	U

Key

S Satisfactory

M Moderate attack, may be satisfactory for use in centrifuge depending on length of exposure, speed involved, etc.; suggest testing under actual conditions of use.

U Unsatisfactory, not recommended.

\- No data available. Because no organized chemical resistance data exists for materials under the stress of centrifugation, when in doubt we recommend pretesting sample lots. suggest testing, using sample to avoid loss of valuable material.

CHEMICAL	MATERIAL ALUMINUM	ANODIC COATING for ALUMINUM	BUNA N	CELLULOSE ACETATE BUTYRATE	POLYURETHANE ROTOR PAINT	COMPOSITE Carbon Fiber/Epoxy	DELRIN™	ETHYLENE PROPYLENE	GLASS	NEOPRENE	NORYL	NYLON™	PET*, POLYCLEAR™, CLEARCRIMP™,CCCLEARCRIMP™	POLYALLOMER	POLYCARBONATE	POLYESTER, GLASS THERMOSET	POLYTHERMIDE	POLYRTHYLENE	POLYPROPYLENE	POLYSULFONE	POLYVINYL CHLORIDE	RULON A™, TEFLON™	SILICONE RUBBER	STAINLESS STEEL	TITANIUM	TYGON™	VITON™
Ammonium Phosphate	U	-	S	-	S	S	S	S	S	S	S	S	-	S	S	M	-	S	S	S	S	S	S	M	S	S	S
Ammonium Sulphate	U	M	S	-	S	S	U	S	S	S	S	S	S	S	S	S	-	S	S	S	S	S	S	U	S	S	U
Amyl Alcohol	S	-	M	U	-	-	S	S	-	M	-	S	-	M	S	S	S	S	M	-	-	-	U	-	S	-	M
Aniline	S	S	U	U	S	U	S	M	S	U	U	U	U	U	U	U	-	S	M	U	U	S	S	S	S	U	S
Sodium Hydroxide (<1 %)	U	-	M	S	S	S	-	-	S	M	S	S	-	S	M	M	S	S	S	S	S	S	M	S	S	-	U
Sodium Hydroxide (10 %)	U	-	M	U	-	-	U	-	M	M	S	S	U	S	U	U	S	S	S	S	S	S	M	S	S	-	U
Barium Salts	M	U	S	-	S	S	S	S	S	S	S	S	S	S	S	M	-	S	S	S	S	S	S	M	S	S	S
Benzene	S	S	U	U	S	U	M	U	S	U	U	S	U	U	U	M	U	M	U	U	U	S	U	U	S	U	S
Benzyl Alcohol	S	-	U	U	-	-	M	M	-	M	-	S	U	U	U	U	U	U	U	-	M	S	M	-	S	-	S
Boric Acid	U	S	S	M	S	S	U	S	S	S	S	S	S	S	S	S	U	S	S	S	S	S	S	S	S	S	S
Cesium Acetate	M	-	S	-	S	S	S	-	S	S	S	S	-	S	S	-	-	S	S	S	S	S	S	M	S	S	S
Cesium Bromide	M	S	S	-	S	S	S	-	S	S	S	S	S	S	S	-	-	S	S	S	S	S	S	M	S	S	S
Cesium Chloride	M	S	S	U	S	S	S	-	S	S	S	S	S	S	S	-	-	S	S	S	S	S	S	M	S	S	S
Cesium Formate	M	S	S	-	S	S	S	-	S	S	S	S	S	S	S	-	-	S	S	S	S	S	S	M	S	S	S
Cesium Iodide	M	S	S	-	S	S	S	-	S	S	S	S	S	S	S	-	-	S	S	S	S	S	S	M	S	S	S
Cesium Sulfate	M	S	S	-	S	S	S	-	S	S	S	S	S	S	S	-	-	S	S	S	S	S	S	M	S	S	S
Chloroform	U	U	U	U	S	S	M	U	S	U	U	M	U	M	U	U	U	M	M	U	U	S	U	U	U	M	S
Chromic Acid (10 %)	U	-	U	U	S	U	U	-	S	S	S	U	S	S	M	U	M	S	S	U	M	S	M	U	S	S	S

Key

S Satisfactory

M Moderate attack, may be satisfactory for use in centrifuge depending on length of exposure, speed involved, etc.; suggest testing under actual conditions of use.

U Unsatisfactory, not recommended.

\- No data available. Because no organized chemical resistance data exists for materials under the stress of centrifugation, when in doubt we recommend pretesting sample lots. suggest testing, using sample to avoid loss of valuable material.

CHEMICAL	MATERIAL ALUMINUM	ANODIC COATING for ALUMINUM	BUNA N	CELLULOSE ACETATE BUTYRATE	POLYURETHANE ROTOR PAINT	COMPOSITE Carbon Fiber/Epoxy	DELRIN™	ETHYLENE PROPYLENE	GLASS	NEOPRENE	NORYL	NYLON™	PET*, POLYCLEAR™, CLEARCRIMP™,CCCLEARCRIMP™	POLYALLOMER	POLYCARBONATE	POLYESTER, GLASS THERMOSET	POLYTHERMIDE	POLYRTHYLENE	POLYPROPYLENE	POLYSULFONE	POLYVINYL CHLORIDE	RULON A™, TEFLON™	SILICONE RUBBER	STAINLESS STEEL	TITANIUM	TYGON™	VITON™
Chromic Acid (50 %)	U	-	U	U	-	U	U	-	-	-	S	U	U	S	M	U	M	S	S	U	M	S	-	U	M	-	S
Cresol Mixture	S	S	U	-	-	-	S	-	S	U	U	U	U	U	U	-	-	U	U	-	U	S	S	S	S	U	S
Cyclohexane	S	S	S	-	S	S	S	U	S	U	S	S	U	U	U	M	S	M	U	M	M	S	U	M	M	U	S
Deoxycholate	S	S	S	-	S	S	S	-	S	S	S	S	S	S	S	-	-	S	S	S	S	S	S	S	S	S	S
Distilled Water	S	S	S	S	S	S	S	S	S	S	S	S	S	S	S	S	S	S	S	S	S	S	S	S	S	S	S
Dextran	M	S	S	S	S	S	S	-	S	S	S	S	S	S	S	S	S	S	S	S	S	S	S	M	S	S	S
Diethyl Ether	S	S	U	U	S	S	S	U	S	U	U	S	U	U	U	U	U	U	U	U	U	S	S	S	S	M	U
Diethyl Ketone	S	-	U	U	-	-	M	-	S	U	-	S	-	M	U	U	U	M	M	-	U	S	-	-	S	U	U
Diethylpyrocarbonate	S	S	U	-	S	S	S	-	S	S	U	S	U	S	U	-	-	S	S	S	M	S	S	S	S	S	S
Dimethylsulfoxide	S	S	U	U	S	S	S	-	S	U	S	S	U	S	U	U	-	S	S	U	U	S	S	S	S	U	U
Dioxane	M	S	U	U	S	S	M	M	S	U	U	S	U	M	U	U	-	M	M	M	U	S	S	S	S	U	U
Ferric Chloride	U	U	S	-	-	-	M	S	-	M	-	S	-	S	-	-	-	S	S	-	-	-	M	U	S	-	S
Acetic Acid (Glacial)	S	S	U	U	S	S	U	M	S	U	S	U	U	U	U	U	M	S	U	M	U	S	U	U	S	-	U
Acetic Acid (5 %)	S	S	M	S	S	S	M	S	S	S	S	S	M	S	S	S	S	S	S	S	M	S	S	M	S	S	M
Acetic Acid (60 %)	S	S	U	U	S	S	U	-	S	M	S	U	U	M	U	S	M	S	M	S	M	S	M	U	S	M	U
Ethyl Acetate	M	M	U	U	S	S	M	M	S	S	U	S	U	M	U	U	-	S	S	U	U	S	M	M	S	U	U
Ethyl Alcohol (50 %)	S	S	S	S	S	S	M	S	S	S	S	S	U	S	U	S	S	S	S	S	S	S	S	M	S	M	U
Ethyl Alcohol (95 %)	S	S	S	U	S	S	M	S	S	S	S	S	U	S	U	-	S	S	S	M	S	S	S	U	S	M	U

Key

S Satisfactory

M Moderate attack, may be satisfactory for use in centrifuge depending on length of exposure, speed involved, etc.; suggest testing under actual conditions of use.

U Unsatisfactory, not recommended.

\- No data available. Because no organized chemical resistance data exists for materials under the stress of centrifugation, when in doubt we recommend pretesting sample lots. suggest testing, using sample to avoid loss of valuable material.

CHEMICAL	MATERIAL ALUMINUM	ANODIC COATING for ALUMINUM	BUNA N	CELLULOSE ACETATE BUTYRATE	POLYURETHANE ROTOR PAINT	COMPOSITE Carbon Fiber/Epoxy	DELRIN™	ETHYLENE PROPYLENE	GLASS	NEOPRENE	NORYL	NYLON™	PET*, POLYCLEAR™, CLEARCRIMP™,CCCLEARCRIMP™	POLYALLOMER	POLYCARBONATE	POLYESTER, GLASS THERMOSET	POLYTHERMIDE	POLYRTHYLENE	POLYPROPYLENE	POLYSULFONE	POLYVINYL CHLORIDE	RULON A™, TEFLON™	SILICONE RUBBER	STAINLESS STEEL	TITANIUM	TYGON™	VITON™
Ethylene Dichloride	S	-	U	U	-	-	S	M	-	U	U	S	U	U	U	U	U	U	U	-	U	S	U	-	S	-	S
Ethylene Glycol	S	S	S	S	S	S	S	S	S	S	S	S	-	S	U	S	S	S	S	S	S	S	S	M	S	M	S
Ethylene Oxide Vapor	S	-	U	-	-	U	-	-	S	U	-	S	-	S	M	-	-	S	S	S	U	S	U	S	S	S	U
Ficoll-Hypaque	M	S	S	-	S	S	S	-	S	S	S	S	-	S	S	-	S	S	S	S	S	S	S	M	S	S	S
Hydrofluoric Acid (10 %)	U	U	U	M	-	-	U	-	-	U	U	S	-	S	M	U	S	S	S	S	M	S	U	U	U	-	-
Hydrofluoric Acid (50 %)	U	U	U	U	-	-	U	-	-	U	U	U	U	S	U	U	U	S	S	M	M	S	U	U	U	-	M
Hydrofluoric Acid (conc.)	U	U	U	U	-	U	U	M	-	U	M	U	U	M	U	U	U	-	S	-	U	S	U	U	U	-	-
Formaldehyde (40 %)	M	M	M	S	S	S	S	M	S	S	S	S	M	S	S	S	U	S	S	M	S	S	S	M	S	M	U
Glutaraldehyde	S	S	S	S	-	-	S	-	S	S	S	S	S	S	S	-	-	S	S	S	-	-	S	S	S	-	-
Glycerol	M	S	S	-	S	S	S	S	S	S	S	S	S	S	S	S	-	S	S	S	S	S	S	S	S	S	S
Guanidine Hydrochloride	U	U	S	-	S	S	S	-	S	S	S	S	S	S	S	-	-	S	S	S	S	S	S	U	S	S	S
Haemo-Sol	S	S	S	-	-	-	S	-	S	S	S	S	S	S	S	-	-	S	S	S	S	S	S	S	S	S	S
Hexane	S	S	S	-	S	S	S	-	S	S	U	S	U	M	U	S	S	U	S	S	M	S	U	S	S	U	S
Isobutyl Alcohol	-	-	M	U	-	-	S	S	-	U	-	S	U	S	S	M	S	S	S	-	S	S	S	-	S	-	S
Isopropyl Alcohol	M	M	M	U	S	S	S	S	S	U	S	S	U	S	U	M	S	S	S	S	S	S	S	M	M	M	S
Iodoacetic Acid	S	S	M	-	S	S	S	-	S	M	S	S	M	S	S	-	M	S	S	S	S	S	M	S	S	M	M

Key

S Satisfactory

M Moderate attack, may be satisfactory for use in centrifuge depending on length of exposure, speed involved, etc.; suggest testing under actual conditions of use.

U Unsatisfactory, not recommended.

\- No data available. Because no organized chemical resistance data exists for materials under the stress of centrifugation, when in doubt we recommend pretesting sample lots. suggest testing, using sample to avoid loss of valuable material.

CHEMICAL	MATERIAL ALUMINUM	ANODIC COATING for ALUMINUM	BUNA N	CELLULOSE ACETATE BUTYRATE	POLYURETHANE ROTOR PAINT	COMPOSITE Carbon Fiber/Epoxy	DELRIN™	ETHYLENE PROPYLENE	GLASS	NEOPRENE	NORYL	NYLON™	PET*, POLYCLEAR™, CLEARCRIMP™,CCCLEARCRIMP™	POLYALLOMER	POLYCARBONATE	POLYESTER, GLASS THERMOSET	POLYTHERMIDE	POLYRTHYLENE	POLYPROPYLENE	POLYSULFONE	POLYVINYL CHLORIDE	RULON A™, TEFLON™	SILICONE RUBBER	STAINLESS STEEL	TITANIUM	TYGON™	VITON™
Potassium Bromide	U	S	S	-	S	S	S	-	S	S	S	S	S	S	S	S	S	S	S	-	S	S	S	M	S	S	S
Potassium Carbonate	M	U	S	S	S	S	S	-	S	S	S	S	S	S	U	S	S	S	S	S	S	S	S	S	S	S	S
Potassium Chloride	U	S	S	-	S	S	S	S	S	S	S	S	S	S	S	-	S	S	S	S	S	S	S	U	S	S	S
Potassium Hydroxide (5%)	U	U	S	S	S	S	M	-	S	S	S	S	-	S	U	S	S	S	S	S	S	S	M	U	M	S	U
Potassium Hydroxide (conc.)	U	U	M	U	-	-	M	-	M	S	S	-	U	M	U	U	U	S	M	-	M	U	-	U	U	-	U
Potassium Permanganate	S	S	S	-	S	S	S	-	S	S	S	U	S	S	S	M	-	S	M	S	U	S	S	M	S	U	S
Calcium Chloride	M	U	S	S	S	S	S	S	S	S	S	S	S	S	M	S	-	S	S	S	S	S	S	M	S	S	S
Calcium Hypochlorite	M	-	U	-	S	M	M	S	-	M	-	S	-	S	M	S	-	S	S	S	M	S	M	U	S	-	S
Kerosene	S	S	S	-	S	S	S	U	S	M	U	S	U	M	M	S	-	M	M	M	S	S	U	S	S	U	S
Sodium Chloride (10 %)	S	-	S	S	S	S	S	S	-	-	-	S	S	S	S	S	-	S	S	S	S	-	S	S	M	-	S
Iodoacetic Acid	U	-	S	U	S	S	S	-	-	-	-	S	S	S	S	S	-	S	S	-	S	-	S	S	M	-	S
Carbon Tetrachloride	U	U	M	S	S	U	M	U	S	U	U	S	U	M	U	S	S	M	M	S	M	M	M	M	U	S	S
Aqua Regia	U	-	U	U	-	-	U	-	-	-	-	-	U	U	U	U	U	U	U	-	-	-	-	-	S	-	M
Solution 555 (20 %)	S	S	S	-	-	-	S	-	S	S	S	S	S	S	S	-	-	S	S	S	-	S	S	S	S	S	S
Magnesium Chloride	M	S	S	-	S	S	S	S	S	S	S	S	S	S	S	S	S	S	S	S	S	S	S	M	S	S	S

Key

S Satisfactory

M Moderate attack, may be satisfactory for use in centrifuge depending on length of exposure, speed involved, etc.; suggest testing under actual conditions of use.

U Unsatisfactory, not recommended.

\- No data available. Because no organized chemical resistance data exists for materials under the stress of centrifugation, when in doubt we recommend pretesting sample lots. suggest testing, using sample to avoid loss of valuable material.

CHEMICAL	MATERIAL ALUMINUM	ANODIC COATING for ALUMINUM	BUNA N	CELLULOSE ACETATE BUTYRATE	POLYURETHANE ROTOR PAINT	COMPOSITE Carbon Fiber/Epoxy	DELRIN™	ETHYLENE PROPYLENE	GLASS	NEOPRENE	NORYL	NYLON™	PET*, POLYCLEAR™, CLEARCRIMP™,CCCLEARCRIMP™	POLYALLOMER	POLYCARBONATE	POLYESTER, GLASS THERMOSET	POLYTHERMIDE	POLYRTHYLENE	POLYPROPYLENE	POLYSULFONE	POLYVINYL CHLORIDE	RULON A™, TEFLON™	SILICONE RUBBER	STAINLESS STEEL	TITANIUM	TYGON™	VITON™
Mercaptoacetic Acid	U	S	U	-	S	M	S	-	S	M	S	U	U	U	U	-	S	U	U	S	M	S	U	S	S	S	S
Methyl Alcohol	S	S	S	U	S	S	M	S	S	S	S	S	U	S	U	M	S	S	S	S	S	S	S	M	S	M	U
Methylene Chloride	U	U	U	U	M	S	S	U	S	U	U	S	U	U	U	U	U	M	U	U	U	S	S	M	U	S	U
Methyl Ethyl Ketone	S	S	U	U	S	S	M	S	S	U	U	S	U	S	U	U	U	S	S	U	U	S	S	S	S	U	U
Metrizamide	M	S	S	-	S	S	S	-	S	S	S	S	-	S	S	-	-	S	S	S	S	S	S	M	S	S	S
Lactic Acid (100 %)	-	-	S	-	-	-	-	-	-	M	S	U	-	S	S	S	M	S	S	-	M	S	M	S	S	-	S
Lactic Acid (20 %)	-	-	S	S	-	-	-	-	-	M	S	M	-	S	S	S	S	S	S	S	M	S	M	S	S	-	S
N-Butyl Alcohol	S	-	S	U	-	-	S	-	-	S	M	-	U	S	M	S	S	S	S	M	M	S	M	-	S	-	S
N-Butyl Phthalate	S	S	U	-	S	S	S	-	S	U	U	S	U	U	U	M	-	U	U	S	U	S	M	M	S	U	S
N, N-Dimethylformamide	S	S	S	U	S	M	S	-	S	S	U	S	U	S	U	U	-	S	S	U	U	S	M	S	S	S	U
Sodium Borate	M	S	S	S	S	S	S	S	S	S	S	U	S	S	S	S	-	S	S	S	S	S	S	M	S	S	S
Sodium Bromide	U	S	S	-	S	S	S	-	S	S	S	S	S	S	S	S	-	S	S	S	S	S	S	M	S	S	S
Sodium Carbonate (2 %)	M	U	S	S	S	S	S	S	S	S	S	S	S	S	U	S	S	S	S	S	S	S	S	S	S	S	S
Sodium Dodecyl Sulphate	S	S	S	-	S	S	S	-	S	S	S	S	S	S	S	-	S	S	S	S	S	S	S	S	S	S	S
Sodium Hypochlorite (5 %)	U	U	M	S	S	M	U	S	S	M	S	S	S	M	S	S	S	S	M	S	S	S	M	U	S	M	S
Sodium Iodide	M	S	S	-	S	S	S	-	S	S	S	S	S	S	S	-	-	S	S	S	S	S	S	M	S	S	S
Sodium Nitrate	S	S	S	-	S	S	S	S	S	S	S	S	S	S	S	S	-	S	S	S	S	S	U	S	S	S	S

Key

S Satisfactory

M Moderate attack, may be satisfactory for use in centrifuge depending on length of exposure, speed involved, etc.; suggest testing under actual conditions of use.

U Unsatisfactory, not recommended.

\- No data available. Because no organized chemical resistance data exists for materials under the stress of centrifugation, when in doubt we recommend pretesting sample lots. suggest testing, using sample to avoid loss of valuable material.

CHEMICAL	MATERIAL ALUMINUM	ANODIC COATING for ALUMINUM	BUNA N	CELLULOSE ACETATE BUTYRATE	POLYURETHANE ROTOR PAINT	COMPOSITE Carbon Fiber/Epoxy	DELRIN™	ETHYLENE PROPYLENE	GLASS	NEOPRENE	NORYL	NYLON™	PET*, POLYCLEAR™, CLEARCRIMP™,CCCLEARCRIMP™	POLYALLOMER	POLYCARBONATE	POLYESTER, GLASS THERMOSET	POLYTHERMIDE	POLYRTHYLENE	POLYPROPYLENE	POLYSULFONE	POLYVINYL CHLORIDE	RULON A™, TEFLON™	SILICONE RUBBER	STAINLESS STEEL	TITANIUM	TYGON™	VITON™
Sodium Sulphate	U	S	S	-	S	S	S	S	S	S	S	S	S	S	S	S	S	S	S	S	S	S	S	M	S	S	S
Sodium Sulphide	S	-	S	S	-	-	-	S	-	-	-	S	S	S	U	U	-	-	S	-	-	-	S	S	M	-	S
Sodium Sulphite	S	S	S	-	S	S	S	S	M	S	S	S	S	S	S	M	-	S	S	S	S	S	S	S	S	S	S
Nickel Salts	U	S	S	S	S	S	-	S	S	S	-	-	S	S	S	S	-	S	S	S	S	S	S	M	S	S	S
Oils (Petroleum)	S	S	S	-	-	-	S	U	S	S	S	S	U	U	M	S	M	U	U	S	S	S	U	S	S	S	S
Oils (Other)	S	-	S	-	-	-	S	M	S	S	S	S	U	S	S	S	S	U	S	S	S	S	-	S	S	M	S
Oleic Acid	S	-	U	S	S	S	U	U	S	U	S	S	M	S	S	S	S	S	S	S	S	S	M	U	S	M	M
Oxalic Acid	U	U	M	S	S	S	U	S	S	S	S	S	U	S	U	S	S	S	S	S	S	S	S	U	M	S	S
Perchloric Acid (10 %)	U	-	U	-	S	U	U	-	S	M	M	-	-	M	U	M	S	M	M	-	M	S	U	-	S	-	S
Perchloric Acid (70 %)	U	U	U	-	-	U	U	-	S	U	M	U	U	M	U	U	U	M	M	U	M	S	U	U	S	U	S
Phenol (5 %)	U	S	U	-	S	M	M	-	S	U	M	U	U	S	U	M	S	M	S	U	U	S	U	M	M	M	S
Phenol (50 %)	U	S	U	-	S	U	M	-	S	U	M	U	U	U	U	U	S	U	M	U	U	S	U	U	U	M	S
Phosphoric Acid (10 %)	U	U	M	S	S	S	U	S	S	S	S	U	-	S	S	S	S	S	S	S	S	S	U	M	U	S	S
Phosphoric Acid (conc.)	U	U	M	M	-	-	U	S	-	M	S	U	U	M	M	S	S	S	M	S	M	S	U	M	U	-	S
Physiologic Media (Serum, Urine)	M	S	S	S	-	-	S	-	S	S	S	S	S	S	S	S	S	S	S	S	S	S	S	S	S	S	S
Picric Acid	S	S	U	-	S	M	S	S	S	M	S	U	S	S	S	U	S	S	S	S	U	S	U	M	S	M	S
Pyridine (50 %)	U	S	U	U	S	U	U	-	U	S	S	U	U	M	U	U	-	U	S	M	U	S	S	U	U	U	U
Rubidium Bromide	M	S	S	-	S	S	S	-	S	S	S	S	S	S	S	-	-	S	S	S	S	S	S	M	S	S	S

Key

S Satisfactory

M Moderate attack, may be satisfactory for use in centrifuge depending on length of exposure, speed involved, etc.; suggest testing under actual conditions of use.

U Unsatisfactory, not recommended.

\- No data available. Because no organized chemical resistance data exists for materials under the stress of centrifugation, when in doubt we recommend pretesting sample lots. suggest testing, using sample to avoid loss of valuable material.

CHEMICAL	MATERIAL ALUMINUM	ANODIC COATING for ALUMINUM	BUNA N	CELLULOSE ACETATE BUTYRATE	POLYURETHANE ROTOR PAINT	COMPOSITE Carbon Fiber/Epoxy	DELRIN™	ETHYLENE PROPYLENE	GLASS	NEOPRENE	NORYL	NYLON™	PET*, POLYCLEAR™, CLEARCRIMP™,CCCLEARCRIMP™	POLYALLOMER	POLYCARBONATE	POLYESTER, GLASS THERMOSET	POLYTHERMIDE	POLYRTHYLENE	POLYPROPYLENE	POLYSULFONE	POLYVINYL CHLORIDE	RULON A™, TEFLON™	SILICONE RUBBER	STAINLESS STEEL	TITANIUM	TYGON™	VITON™
Rubidium Chloride	M	S	S	-	S	S	S	-	S	S	S	S	S	S	S	-	-	S	S	S	S	S	S	M	S	S	S
Sucrose	M	S	S	-	S	S	S	S	S	S	S	S	S	S	S	S	S	S	S	S	S	S	S	S	S	S	S
Sucrose, Alkaline	M	S	S	-	S	S	S	-	S	S	S	S	S	S	U	S	S	S	S	S	S	S	S	M	S	S	S
Sulfosalicylic Acid	U	U	S	S	S	S	S	-	S	S	S	U	S	S	S	-	S	S	S	-	S	S	S	U	S	S	S
Nitric Acid (10 %)	U	S	U	S	S	U	U	-	S	U	S	U	-	S	S	S	S	S	S	S	S	S	M	S	S	S	S
Nitric Acid (50 %)	U	S	U	M	S	U	U	-	S	U	S	U	U	M	M	U	M	M	M	S	S	S	U	S	S	M	S
Nitric Acid (95 %)	U	-	U	U	-	U	U	-	-	U	U	U	U	M	U	U	U	U	M	U	U	S	U	S	S	-	S
Hydrochloric Acid (10 %)	U	U	M	S	S	S	U	-	S	S	S	U	U	S	U	S	S	S	S	S	S	S	S	U	M	S	S
Hydrochloric Acid (50 %)	U	U	U	U	S	U	U	-	S	M	S	U	U	M	U	U	S	S	S	S	M	S	M	U	U	M	M
Sulfuric Acid (10 %)	M	U	U	S	S	U	U	-	S	S	M	U	S	S	S	S	S	S	S	S	S	S	U	U	U	S	S
Sulfuric Acid (50 %)	M	U	U	U	S	U	U	-	S	S	M	U	U	S	U	U	M	S	S	S	S	S	U	U	U	M	S
Schwefelsäure (konz.)	M	U	U	U	-	U	U	M	-	-	M	U	U	S	U	U	U	M	S	U	M	S	U	U	U	-	S
Stearic Acid	S	-	S	-	-	-	S	M	S	S	S	S	-	S	S	S	S	S	S	S	S	S	M	M	S	S	S
Tetrahydrofuran	S	S	U	U	S	U	U	M	S	U	U	S	U	U	U	-	M	U	U	U	U	S	U	S	S	U	U
Toluene	S	S	U	U	S	S	M	U	S	U	U	S	U	U	U	S	U	M	U	U	U	S	U	S	U	U	M
Trichloroacetic Acid	U	U	U	-	S	S	U	M	S	U	S	U	U	S	M	-	M	S	S	U	U	S	U	U	U	M	U
Trichloroethane	S	-	U	-	-	-	M	U	-	U	-	S	U	U	U	U	U	U	U	U	U	S	U	-	S	-	S
Trichloroethylene	-	-	U	U	-	-	-	U	-	U	-	S	U	U	U	U	U	U	U	U	U	S	U	-	U	-	S

Key

S Satisfactory

M Moderate attack, may be satisfactory for use in centrifuge depending on length of exposure, speed involved, etc.; suggest testing under actual conditions of use.

U Unsatisfactory, not recommended.

\- No data available. Because no organized chemical resistance data exists for materials under the stress of centrifugation, when in doubt we recommend pretesting sample lots. suggest testing, using sample to avoid loss of valuable material.

CHEMICAL	MATERIAL ALUMINUM	ANODIC COATING for ALUMINUM	BUNA N	CELLULOSE ACETATE BUTYRATE	POLYURETHANE ROTOR PAINT	COMPOSITE Carbon Fiber/Epoxy	DELRIN™	ETHYLENE PROPYLENE	GLASS	NEOPRENE	NORYL	NYLON™	PET*, POLYCLEAR™, CLEARCRIMP™,CCCLEARCRIMP™	POLYALLOMER	POLYCARBONATE	POLYESTER, GLASS THERMOSET	POLYTHERMIDE	POLYRTHYLENE	POLYPROPYLENE	POLYSULFONE	POLYVINYL CHLORIDE	RULON A™, TEFLON™	SILICONE RUBBER	STAINLESS STEEL	TITANIUM	TYGON™	VITON™
Trisodiumfosphate	-	-	-	S	-	-	M	-	-	-	-	-	-	S	-	-	S	S	S	-	-	S	-	-	S	-	S
Tris Buffer (neutral pH)	U	S	S	S	S	S	S	-	S	S	S	S	S	S	S	S	S	S	S	S	S	S	S	S	S	S	S
Triton X-100	S	S	S	-	S	S	S	-	S	S	S	S	S	S	S	S	S	S	S	S	S	S	S	S	S	S	S
Urea	S	-	U	S	S	S	S	-	-	-	-	S	S	S	M	S	S	S	S	-	S	S	S	M	S	-	S
Hydrogen Peroxide (10 %)	U	U	M	S	S	U	U	-	S	S	S	U	S	S	S	M	U	S	S	S	S	S	S	M	S	U	S
Hydrogen Peroxide (3 %)	S	M	S	S	S	-	S	-	S	S	S	S	S	S	S	S	M	S	S	S	S	S	S	S	S	S	S
Xylene	S	S	U	S	S	S	M	U	S	U	U	U	U	U	U	M	U	M	U	U	U	S	U	M	S	U	S
Zinc Chloride	U	U	S	S	S	S	U	S	S	S	S	S	S	S	S	S	S	S	S	S	S	S	S	U	S	S	S
Zinc Sulphate	U	S	S	-	S	S	S	S	S	S	S	S	S	S	S	S	S	S	S	S	S	S	S	S	S	S	S
Citric Acid (10 %)	M	S	S	M	S	S	M	S	S	S	S	S	S	S	S	S	M	S	S	S	S	S	S	S	S	S	S

*Polyethyleneterephthalate

Key

S Satisfactory

M Moderate attack, may be satisfactory for use in centrifuge depending on length of exposure, speed involved, etc.; suggest testing under actual conditions of use.

U Unsatisfactory, not recommended.

\- Performance unknown; suggest testing, using sample to avoid loss of valuable material.

Note: Chemical resistance data is included only as a guide to product use. Because no organized chemical compatibility data exists for materials under the stress of centrifugation, when in doubt we recommend pretesting sample lots.

Trademarks and Owners

DELRIN, CLEARCRIMP: E. I. du Pont de Nemours and Company

NORYL: AABIC Innovative Plastics IP B.V.

POLYCLEAR: ICL SPECIALTY PRODUCTS, INC.

RULON A, TYGON: Saint-Gobain Performance Plastics

TEFLON: The Chemours Company FC

VITON: FKM

WEEE Compliance

WEEE Compliance. This product is required to comply with the European Union's Waste Electrical & Electronic Equipment (WEEE) Directive 2012/19/EU. It is marked with the following symbol. Fisher Scientific has contracted with one or more recycling/disposal companies in each EU Member State, and this product should be disposed of or recycled through them. Further information on our compliance with these Directives, the recyclers in your country, and information on Scientific products which may assist the detection of substances subject to the RoHS Directive are available at www.thermofisher.com/WEEERoHS under Services & Support.

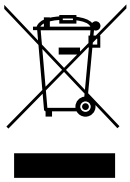

WEEE Konformittät. Dieses Produkt muss die EU Waste Electrical & Electronic Equipment (WEEE) Richtlinie 2012/19/EU erfüllen. Das Produkt ist durch folgendes Symbol gekennzeichnet. Fisher Scientific hat Vereinbarungen getroffen mit Verwertungs-/Entsorgungsanlagen in allen EU-Mitgliederstaaten und dieses Produkt muss durch diese Firmen widerverwetet oder entsorgt werden. Mehr Informationen über die Einhaltung dieser Anweisungen durch Scientific, dieVerwerter und Hinweise die Ihnen nützlich sein können, die Fisher Scientific Produkte zu identizfizieren, die unter diese RoHS. Anweisungfallen, finden Sie unter www.thermofisher.com/WEEERoHS unter Services & Support.

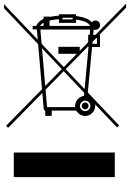

Conformità WEEE. Questo prodotto deve rispondere alla direttiva dell' Unione Europea 2012/19/EU in merito ai Rifiuti degli Apparecchi Elettrici ed Elettronici (WEEE). È marcato col seguente simbolo. Fischer Scientific ha stipulato contratti con una o diverse società di riciclaggio/smaltimento in ognuno degli Stati Membri Europei. Questo prodotto verrà smaltito o riciclato tramite queste medesime. Ulteriori informazioni sulla conformità di Fisher Scientific con queste Direttive, l'elenco delle ditte di riciclaggio nel Vostro paese e informazioni sui prodotti Scientific che possono essere utili alla rilevazione di sostanze soggette alla Direttiva RoHS sono disponibili sul sito www.thermofisher.com/WEEERoHS in Servizi e Supporto.

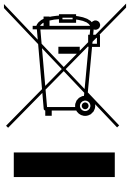

Conformité WEEE. Ce produit doit être conforme à la directive euro-péenne (2012/19/EU) des Déchets d'Equipements Electriques et Electroniques (DEEE). Il est marqué par le symbole suivant. Fisher Scientific s'est associé avec une ou plusieurs compagnies de recyclage dans chaque état membre de l'union européenne et ce produit devrait être collecté ou recyclé par celles-ci. Davantage d'informations sur la conformité de Fisher Scientific à ces directives, les recycleurs dans votre pays et les informations sur les produits Fisher Scientific qui peuvent aider le détection des substances sujettes à la directive RoHS sont disponibles sur www.thermofisher.com/WEEERoHS sous Services et Assistance.

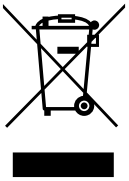

Cumplimiento de la directiva RAEE. Este producto está obligado a cumplir con la Directiva de la Unión Europea sobre residuos de aparatos eléctricos y electrónicos (RAEE) 2012/19/EU. Está marcado con el siguiente símbolo. Fisher Scientific ha contratado a una o varias empresas de reciclado/disposición de residuos en cada estado miembro de la UE, y este producto debe reciclarse o desecharse a través de dichas empresas. Para obtener más información sobre nuestro cumplimiento con estas directivas, las empresas de reciclaje de su país, así como información sobre los productos Scientific que pueden ayudarle a detectar sustancias sujetas a la directiva RoHS, visite www.thermofisher.com/WEEERoHS en la sección Servicios y Asistencia.

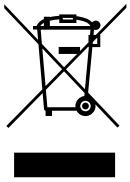

IF YOU NEED ASSISTANCE:

Fisher Scientific products are backed by a global technical support team ready to support your applications. We offer cold storage accessories, including remote alarms, temperature recorders, and validation services. Visit eu.fishersci.com or call:

Countries	Sales	Services
Austria:	+43 (0)800 20 88 40 at.fishersci.com	+43 1 333 50340 unity.at@thermofisher.com
Belgium	+32 (0)56 260 260 be.fishersci.com	+32 (0) 9 272 54 80 unity.bnl@thermofisher.com
Denmark	+45 70 27 99 20 fishersci.dk	+45 70 23 62 67 unity.dk@thermofisher.com
Germany	+49 (0)2304 9325 de.fishersci.com	+49 6103 408 1050 unity.de@thermofisher.com
Ireland	+353 (0)1 885 5854 ie.fishersci.com	+44 870 241 1034 unity.ie@thermofisher.com
Italy	+39 02 950 59 478 it.fishersci.com	+39 800 823 162 unity.it@thermofisher.com
Finland	+358 (0)9 8027 6280 fishersci.fi	+46 8 556 468 20 unity.fi@thermofisher.com
France	+33 (0)3 88 67 14 14 fr.fishersci.com	+33 1 60 92 49 50 unity.fr@thermofisher.com
Netherlands	+31 (0)20 487 70 00 nl.fishersci.com	+31 (0) 76 579 55 55 unity.bnl@thermofisher.com
Norway	+47 22 95 59 59 fishersci.no	+46 8 556 468 20 unity.no@thermofisher.com
Portugal	+351 21 425 33 50 pt.fishersci.com	+34 913 806 733 unity.pt@thermofisher.com
Spain	+34 902 239 303 es.fishersci.com	+34 913 806 733 unity.es@thermofisher.com
Sweden	+46 31 352 32 00 fishersci.se	+ 46 8 556 468 20 unity.se@thermofisher.com
Switzerland	+41 (0)56 618 41 11 ch.fishersci.com	+ 41(0)61 716 77 40 unity.ch@thermofisher.com
UK	+44 (0)1509 555 500 fishersci.co.uk	+44 870 241 1034 unity.uk@thermofisher.com

fisherbrand

Fisherbrand GT1 Centrifuge:

Thermo Fisher Scientific
Zweigniederlassung Osterode
Am Kalkberg, 37520 Osterode am Harz
Germany

Fisherbrand GT1R Centrifuge:

Thermo Fisher Scientific
Zweigniederlassung Osterode
Am Kalkberg, 37520 Osterode am Harz
Germany

50156465 is the original instruction manual.

Find out more at **eu.fishersci.com**

fisher scientific
part of Thermo Fisher Scientific

50156465-c
15878722, 15868722