sigma
Laborzentrifugen
Laboratory Centrifuges

Laboratory Centrifuge
2-16P
Operating Manual

Serial No. 120756

Please retain for later use!

Dear Customer,

Congratulations on your purchase of a SIGMA laboratory centrifuge. You have selected a device that combines many advantages.

The SIGMA 2-16P is a microprocessor-controlled universal laboratory centrifuge. The electronic operation control enables a trouble-free use of the centrifuge. With its quiet 3-phase maintenance-free drive, operation without any carbon dust pollution is guaranteed.

Your device is equipped with user-friendly options that make the operation and standard settings easier for you. Built-in error-detecting functions keep the user from entering erroneous values and they also check the entire operation.

All of the settings are executed via the control panel with a coated surface that protects the device against moisture and dust. In addition, the interior of the centrifuge is also rather easy to clean. We offer you a device that combines functional variety along with practical applications.

Our centrifuges are carefully manufactured according to the highest quality standards, in which we are certain that your demands will always be met.

We wish you much success in the use of the centrifuge.

SIGMA Laborzentrifugen GmbH

An der Unteren Söse 50 Postfach 17 13
D-37520 Osterode D-37507 Osterode

Phone: +49 (0) 5522/5007-0 – Fax: ++49 (0) 5522/5007-12
Internet : www.sigma-zentrifugen.de
E-mail : info@sigma-zentrifugen.de
SIGMA Service Phone: +49 (0) 5522/5007-8425
Fax: +49 (0) 5522/8007-9425

© 2007 by SIGMA Laborzentrifugen GmbH
Modifications reserved.

Konformitätserklärung

(2006/42/EG; 2006/95/EG; 2004/108/EG)

Declaration of Conformity

(2006/42/EG; 2006/95/EG; 2004/108/EG)

Déclaration de conformité

(2006/42/EG; 2006/95/EG; 2004/108/EG)

Die nachfolgend bezeichnete Maschine wurde in Übereinstimmung mit den Richtlinien 2006/42/EG; 2006/95/EG und 2004/108/EG hergestellt und geprüft.
The following machine is manufactured and tested in compliance with directives 2006/42/EG; 2006/95/EG und 2004/108/EG.
La machine désignée ci-dessous est produit et examiné conforme aux directives 2006/42/EG; 2006/95/EG und 2004/108/EG

Bezeichnung der Maschine: Machine: Désignation de la machine:	Laborzentrifuge Laboratory Centrifuge Centrifugeuse de laboratoire
Maschinentyp : Type: Type de la machine:	2 – 16 P
Bestell Nr. : Part No.: Réf. usine:	10155, 10156, 10157
Normen: Standards: Normes :	EN 61010-2-020:2007 EN 61000-3-2:2006; EN 61000-3-3:1995, A2:2005 EN 61326-1:2006

Sigma Laborzentrifugen
An der Unteren Söse 50
D-37520 Osterode

23.11.2007

Geschäftsführer
Managing Director
Directeur Gérant

.....
Fabr. Nr. Serial No. Numéro de série

2-16 P 20071123.DOC

Table of Contents

1 General Information 11

1.1 Importance of the Operating Manual 11

1.2 Intended Use 11

1.3 Technical Data 13

1.3.1 Ambient Temperature 13

1.4 Scope of Supply 15

1.5 Standards and Regulations 15

2 Safety Instructions and Hazard Warnings 16

2.1 Symbols used in the Safety Instructions 16

2.2 Symbols used in the Operating Manual 17

2.3 Informal Notes on Safety 17

2.4 Safety Instructions for Centrifugation 18

2.4.1 Special Instructions 18

2.4.2 Resistance of Plastics 19

2.5 Prohibited Centrifuging Operations and Hazard Warnings 19

2.5.1 Special Hazards 20

2.6 Checks by the Operator 21

2.7 Instructions for Emergency Situations 21

2.8 Remaining Hazards 21

3 Transport and Storage 22

3.1 Dimensions and Weight 22

3.2 Notes on Transport 22

3.3 Notes on Storage 22

4 Set-up and Connection 23

4.1 Unpacking the Centrifuge 23

4.1.1 Transport Safety Device 23

4.2 Installation 24

4.2.1 Installation Site 24

4.2.2 Connection 24

4.2.3 Fuses/Emergency Circuit Breaker on Site 24

5 Using the Centrifuge 25

5.1 Description 25

5.1.1 Operating Elements 25

5.1.2 Operating Panel 26

5.1.2.1 Name Plate 26

5.1.3 Construction and Constructive Safety Measures 27

5.1.4 Drive 27

5.1.5 Operation and Display 27

5.1.6 Electronic System 27

5.1.7 Safety Devices 28

5.1.7.1 Lid Lock and Lid Closing Device 28

5.1.7.2 Standstill Monitoring 28

5.1.7.3 System Check 28

5.1.7.4 Ground Wire Check 28

5.1.7.5 Imbalance Monitoring System 28

5.2 Initial Start-Up 29

5.2.1 Switching the Centrifuge ON 29

5.2.2 Opening and Closing the Lid 29

5.2.3 Installation of Rotors 30

5.2.3.1 Installation of Angle Rotors with a Hermetically Sealed Lid 31

5.2.3.2 Installation of the Microhematocrite Rotor 32

5.2.4 Installation of Accessories 33

5.2.4.1 Carrier Systems 34

5.2.4.2 Tubes 34

5.2.5 Service Life of Rotors and Accessories 34

5.2.6 Starting the Centrifuge 35

5.2.7 Interrupting a Centrifugation Run 35

5.2.7.1 Interrupting a Deceleration Process 35

5.2.7.2 Softstart and Softstop Function 35

5.3 Display / Program Options 36

5.3.1 Time 36

5.3.1.1 Changing the Time Increments 37

5.3.1.2 Short Run 37

5.3.1.3 Continuous Run 37

5.3.2 Speed 38

5.3.2.1 Changing the Speed Increments 38

5.3.3 Relative Centrifugal Force (RCF) 39
5.3.3.1 Changing the RCF Increments 39
5.3.4 Rotor Preselection 40
5.3.5 Program 41
5.3.5.1 Saving the Current Settings 41
5.3.5.2 Calling Up Stored Programs 41
5.3.6 Lockdown 42
5.3.6.1 Permanent Lockdown 42
5.3.7 Activating/Deactivating the Automatic Lid Opening Function 43
5.3.8 Activating/Deactivating the Sound Signal 43

6 Malfunctions and Error Correction 44
6.1 Error Mode 44
6.2 Error Correction 44
6.2.1 No Indication on the Display 44
6.2.2 Centrifuge cannot be started 44
6.2.3 Centrifuge decelerates during Operation 44
6.2.4 Lid cannot be opened 45
6.2.5 Emergency Lid Release 45
6.2.6 Error Codes 46
6.2.7 Service Contact 46

7 Care and Maintenance 47
7.1 Cleaning and Care 47
7.1.1 Centrifuge 47
7.1.2 Accessories 48
7.1.2.1 Plastic Accessories 48
7.1.2.2 Aluminum Accessories 48
7.1.3 Rotor, Buckets, and Multiple Carriers 49
7.1.3.1 Microhematocrite Rotor 49
7.1.4 Load-bearing Bolts 50
7.1.5 Glass Breakage 50
7.2 Sterilization and Disinfection of the Rotor Chamber and Accessories 51
7.2.1 Autoclaving 52

8 Disposal 53
8.1 Disposal of the Centrifuge 53
8.2 Disposal of the Packaging 53

9 Warranty and Liability 53

10 Suitable Accessories 54

10.1 Graphical Representation of the Rotors 61

11 Appendix 62

11.1 Formulae – Mathematical Relations 62

11.1.1 Relative Centrifugal Force (RCF) 62

11.1.2 Density 62

11.1.3 Speed-Gravitational-Field-Diagram 62

11.2 Declaration of Decontamination/Return Declaration 64

11.3 Resistance Data 69

12 Index 73

1 General Information

1.1 Importance of the Operating Manual

- A fundamental requirement for the safe and trouble-free operation of the centrifuge is to be familiar with the fundamental safety instructions and all possible hazards.
- The operating manual includes important information concerning the safe operation of the centrifuge.
- This operating manual and in particular the notes on safety and hazards must be observed by all persons operating the centrifuge.
- In addition, the local rules and regulations for the prevention of accidents must be complied with.

1.2 Intended Use

Centrifuges are power-driven machines that separate liquids from solid matter, liquid mixtures, or solid mixtures by centrifugal force (see BGR 500, chapter 2.11, part 3). They are solely intended for this purpose. Any other use beyond this area of application is regarded as improper use. SIGMA Laborzentrifugen GmbH cannot be held liable for any damage resulting from such improper use.

The intended use also includes

- observation of all the notes and instructions included in the operating manual

and

- compliance with the care, cleaning, and maintenance instructions.

1.3 Technical Data

Manufacturer:	S I G M A Laborzentrifugen GmbH An der Unteren Söse 50 37520 Osterode
Type:	2-16P
Electr. connection: Protection class: IP code:	See name plate I 20
Connected load (kVA): Power consumption (kW): Max. current consumption (A):	0.30 0.21 1.4 (bei 230 V/50 Hz) bzw. 2.8 (bei 120 V/60 Hz)
<u>Performance data:</u> Max. speed (rpm): Max. capacity (ml): Max. gravitational field (x g): Max. kin. energy (Nm):	 15 000 480 20 627 7 756
<u>Other parameters:</u> Time range: Storage locations:	 10 sec - 11 h 59 min; short run, continuous run 50
<u>Physical data:</u> Depth (mm): Width (mm): Height (mm): Weight (kg): EMC as per EN 61326: Noise level (dBA):	 452 365 300 33 Class B < 60
<u>Notes by the user (please fill in)</u>: Serial number: Date of delivery: Inventory number: Installation site: Responsibility:	....

Fig. 1.1: Technical Data

1.3.1 Ambient Temperature

- The figures are valid for an ambient temperature of 23°C +/- 2°C and a nominal voltage of 220-240 V +/- 5%.
- Allowable ambient temperature +4°C to +40°C.
- Max. humidity 80%.
- Lowest storage and transport temperature –20°C (see chapter 3 "Transport and Storage", page 22).

1.4 Scope of Supply

The centrifuge comprises:

• Connecting cable	Part no. 269 010
• Rotor wrench	Part no. 930 100
• 20 ml slushing oil	Part no. 70 104
• 1 tube of grease for load-bearing bolts	Part no. 70 284
• Spare fuses	Part no. 70 102 for 230 V
	Part no. 70 106 for 120 V

Documentation:

Operating manual incl.
- EU Declaration of Conformity (page 5)
- Equipment Decontamination Certificate (page 67)

Accessories

according to your order, our order confirmation, and our delivery note.

1.5 Standards and Regulations

Please refer to the enclosed EU Declaration of Conformity (page 5).

2 Safety Instructions and Hazard Warnings

2.1 Symbols used in the Safety Instructions

International symbols used for SIGMA centrifuges:

Symbol	Title
	Gefährliche elektrische Spannung Dangerous voltage Courant haute tension
	Achtung, Bedienungsanleitung lesen Attention, consult instruction manual Attention, consulter mode d'emploi
I	Ein (Netzverbindung) On (Power) Marche (mise sous tension)
O	Aus (Netzverbindung) Off (Power) Arrêt (mise hors tension)
	Schutzleiteranschluss Protective earth (ground) Liaison à la terre
	Erde Earth (ground) Terre
	Netzstecker ziehen Unplug mains plug Tirer la fiche de prise
	Vorsicht Quetschgefahr Caution! Risk of bruising Attention! Danger de blessure
→	Drehrichtungspfeil Arrow direction of rotation Flèche sens de rotation
	Heiße Oberfläche Hot surface Surface chaude
	Nicht mit dem Hausmüll entsorgen Do not dispose as part of domestic waste Ne pas jeter avec les déchets ménager

Fig. 2.1: Symbols used for SIGMA centrifuges

2.2 Symbols used in the Operating Manual

Symbols used in the Operating Manual:

Symbol	Title
	Gefährliche elektrische Spannung Dangerous voltage Courant haute tension
	Achtung, mögliche gefährliche Situation Attention, potentially dangerous situation Attention, situation potentiellement dangereuse
Attention!	Hinweis auf wichtige Sachverhalte Note concerning important facts Information très importante

Fig. 2.2: Symbols used in the Operating Manual

2.3 Informal Notes on Safety

The operating manual is an integral part of the product.

- Please retain the operating manual throughout the service life of the centrifuge.
- Please hand the operating manual over to any subsequent owner or user of the centrifuge.
- Please add any amendments that you receive to the manual.
- Please make the operating manual readily available at the exact location of the centrifuge at all times.
- The operating personnel must have read and understood the operating manual prior to operation.
- Please also comply with the general and company-specific rules and regulations for the prevention of accidents.

2.4 Safety Instructions for Centrifugation

- Ensure that the centrifuge was set up properly (see section 4.2 “Installation”, page 23).
- Check the centrifuge, rotor, and accessories for external signs of damage prior to start-up.
- Do not use the centrifuge with rotors and accessories that have not been approved by the manufacturer. We explicitly warn against the use of equipment of poor quality. Breaking glass or bursting vessels can cause dangerous imbalances at high speeds. (See 6.2.7 "Service Contact", page 46).
- Ensure that the rotor is correctly fitted (see 5.2.3 "Installation of Rotors“, page 30).
- The load of the rotor as defined by the manufacturer and the maximum speed must not be exceeded (see the engraving on the rotor or bucket).
- The rotor must be loaded symmetrically at equal weights.
- Please observe the instructions on the installation of accessories (see 5.2.4, page 33).

2.4.1 Special Instructions

- If liquids with a density > 1.2 g/cm^3 are used, reduce the speed (see 11.1.2 "Density", page 62).
- Protective clothing is not required for the operation of the centrifuge. The materials to be centrifuged may, however, require special safety measures (e.g. centrifugation of infectious, toxic, radioactive, or pathogenic substances).
- Spin infectious material in sealed rotors and buckets only in order to prevent the material from leaking into the centrifuge.
- Avoid the corrosion of the centrifuge and its accessories by careful maintenance (see chapter 7 "Care and Maintenance", page 47 ff).
- When not using the centrifuge, open the lid so that all liquids can evaporate.
- Stop the centrifuge immediately in the event of a malfunction. Eliminate the problem (see 6.2, page 44 ff) or inform the SIGMA Laborzentrifugen GmbH service team (see 6.2.7 "Service Contact", page 46).

2.4.2 Resistance of Plastics

Chemical influences have a strong effect on the polymeric chains of plastics, and therefore, on their physical properties. Plastic parts can be damaged if solvents, acids, or alkaline solutions are used.

- **Please refer to the resistance table (see 11.3, page 69)!**

2.5 Prohibited Centrifuging Operations and Hazard Warnings

Under the rules stipulated by the German trade association BGR 500, chapter 2.11, part 3, the operator is obliged to:

- take measures in order to prevent all danger to life or health during work.
- ensure that centrifuges are operated properly and entirely as intended (see chapter 1.2 "Intended Use", page 11 of this Instruction Manual).
- take measures for the safe opening of centrifuges.

Please comply with the following hazard warnings. In the case of non-compliance with the instructions, the manufacturer cannot be held liable or subject to any warranty claims.

- Only persons who have read and understood the operating manual in whole are authorized to operate the centrifuge (see 2.3 "Informal Notes on Safety", page 17).
- Keep informed about local fire prevention regulations and measures to contain harmful emissions (depending on the substances to be centrifuged).
- Do not use the centrifuge if it was installed incorrectly.
- Do not use the centrifuge without panels.
- Do not hit or move the centrifuge during its operation.
- Do not lean against or rest on the centrifuge during its operation.
- Maintain a safety distance of at least 30 cm around the centrifuge.
- Do not store any dangerous goods in the centrifuge area.
- Only use the centrifuge with rotors and accessories that have been approved by the manufacturer. We explicitly warn against the use of equipment of poor quality. Breaking glass or bursting vessels can cause dangerous imbalances at high speeds.

- Do not spin any substances that could damage the material of the rotors and buckets of the centrifuge in any way. Highly corrosive substances, for example, damage the material and affect the mechanical strength of the rotors and buckets.

- Infectious, toxic, pathogenic, and radioactive substances must be centrifuged in certified rotors and vessels. **Take suitable precautions for your own safety if there is a risk of toxic, radioactive, or pathogenic contamination.**

- **Please comply with the special precautions for taking care of the centrifuges and accessories. These are measures for maintaining operational safety!** (see chapter 7 "Care and Maintenance", page 47)

Attention!

- Ensure that all repairs are performed only by authorized and specialized personnel (see 6.2.7 "Service Contact", page 46).

2.5.1 Special Hazards

- Do not open the lid when the rotor is in motion!

- Do not reach into the rotor chamber when the rotor is in motion!

- Do not use the centrifuge if the rotor is overloaded. (see 2.4 " Safety Instructions for Centrifugation", page 18).

- Do not use the centrifuge if the rotors and inserts show signs of corrosion or other defects.

- Do not use the centrifuge if the rotor is loaded asymmetrically.

- Do not use the centrifuge with tubes that are excessively long.

- Do not use the centrifuge with an incompletely loaded drum rotor, swing-out rotor or angle rotor with interchangeable buckets.

- Do not use the centrifuge within hazardous locations.

- Do not spin explosive or inflammable substances.

- Materials that chemically react with each other with a high level of energy are prohibited.

2.6 Checks by the Operator

Check all of the safety-relevant parts of the centrifuge at least once per month for any visible signs of damage (e.g. cracks, corrosion). This applies particularly to the following:

- Concentricity of the motor shaft:
  - Visual inspection: Slowly rotate the rotor by hand without the rotor tie-down screw. If the motor shaft does not turn around on a perpendicular axis, the motor and motor shaft must be replaced.
  - Refit the rotor correctly after visual inspection (see 5.2.3 "Installation of Rotors", page 30).
  - Auditory inspection: Check the unit for atypical running noises.
- Fastening of the trunnion pins in the rotor
- Screw connections
- Rotors and accessories. (see 5.2.5 "Service Life of Rotors an Accessories", page 34).

2.7 Instructions for Emergency Situations

- If an emergency arises, actuate the emergency switch at the exit or in the room next door (see 4.2.3 "Fuses/Emergency Circuit Breaker on Site", page 24).

Fire-fighting measures or measures for the containment of harmful emissions depend on the local conditions and on the substances processed in the centrifuge. Please be informed about the rules and regulations that are applicable on-site.

2.8 Remaining Hazards

The centrifuge was built state-of-the-art and according to the accepted safety rules. Danger to life and limb of the user or of third parties, or impairments of the unit or other material assets cannot be completely excluded when the centrifuge is used.

- Use the centrifuge only for the purpose that it was originally intended for (see 1.2, page 11).
- Use the centrifuge only if it is in a perfect running state.
- Immediately eliminate any problems that can affect safety.

3 Transport and Storage

3.1 Dimensions and Weight

Depth:	452 mm
Width:	365 mm
Height:	300 mm
Weight:	33 kg

Fig.3.1: Dimensions and weight

3.2 Notes on Transport

- Always lift the centrifuge with a lifting device or with a sufficient number of people helping you.
- When lifting or carrying the centrifuge, always reach under the centrifuge from the side.
- Install the transport safety device (foamed plastic ring) into the rotor chamber.
- Transport the centrifuge within suitable packaging, and if at all possible, in its original packaging.

3.3 Notes on Storage

The centrifuge can be stored for up to a year without any problems.

- Store the centrifuge only in dry rooms.
- The storage temperature must not exceed –20°C.
- If you would like to store it for more than one year, or if you intend to ship it overseas, please contact the manufacturer.

4 Set-up and Connection

4.1 Unpacking the Centrifuge

- Open the cardboard box.
- Take out the box containing the accessories.
- Remove the upper foam cushion.
- Lift the centrifuge upwards with a lifting device or with a sufficient number of people to lift it safely. When lifting or carrying the centrifuge, always reach under the centrifuge from the side.

Attention!
The centrifuge weighs approx. 33 kg!

Please retain the packaging for any possible future transport of the centrifuge.

4.1.1 Transport Safety Device

The transport safety device of the SIGMA 2-16K centrifuge consists of a foamed plastic ring in the centrifuge chamber. It must be removed prior to start-up.

Procedure:

- Open the lid. To do so,
  - use the emergency release of the lid (see 6.2.5, page 45) if the centrifuge is not connected to the power supply

  or
  - connect the centrifuge to the power supply and press the lid key.
- Unscrew the rotor tie-down screw.
- Remove the foamed plastic ring from the rotor chamber, by lifting it carefully on one side.
- Please retain the transport safety device for the possibility of the return of the centrifuge.

4.2 Installation

4.2.1 Installation Site

All the energy supplied to the centrifuge is converted into heat and emitted to ambient air.

- Ensure sufficient ventilation.
- Keep a safety distance of at least 30 cm from the wall so that the vents in the centrifuge remain fully effective.
- Do not position the centrifuge near heat generators.
- Avoid direct sunlight (UV radiation).
- The table must be stable and have a solid, even surface.

Attention!
During transport from cold to warmer places, condensation will collect inside the centrifuge. It is important to allow sufficient time for drying before the centrifuge can be used again.

4.2.2 Connection

The operating voltage on the name plate must correspond to the local supply voltage!

SIGMA laboratory centrifuges are units of safety class I in accordance with DIN VDE 0700 and have a three-wire power cord (2.5 m) and a shockproof right-angle plug.

On the back, next to the mains power input, there is an additional ground wire connector (see Fig. 5.2, page 25) where a separate ground wire can be connected. This ensures that the admissible leakage current cannot shock anyone if a problem with the protective ground wire system were to occur. Only authorized and specialized personnel are permitted to connect the unit. Please contact the head of our service team (see 6.2.7 "Service Contact", page 46).

4.2.3 Fuses/Emergency Circuit Breaker on Site

Typically, the centrifuges must be protected with 16 A fuses of class "B" or "L".

An on-site emergency circuit breaker to disconnect the centrifuge from the power supply in the event of a malfunction is required (according to IEC 61010-2-20). This switch should be located away from the centrifuge, preferably outside the room where the centrifuge is located or at the exit of this room.

5 Using the Centrifuge

5.1 Description

5.1.1 Operating Elements

1 Mains power switch
2 Stop key
3 Lid key
4 Display
5 Lid
6 Start key
7 Left rotary knob
8 Right rotary knob

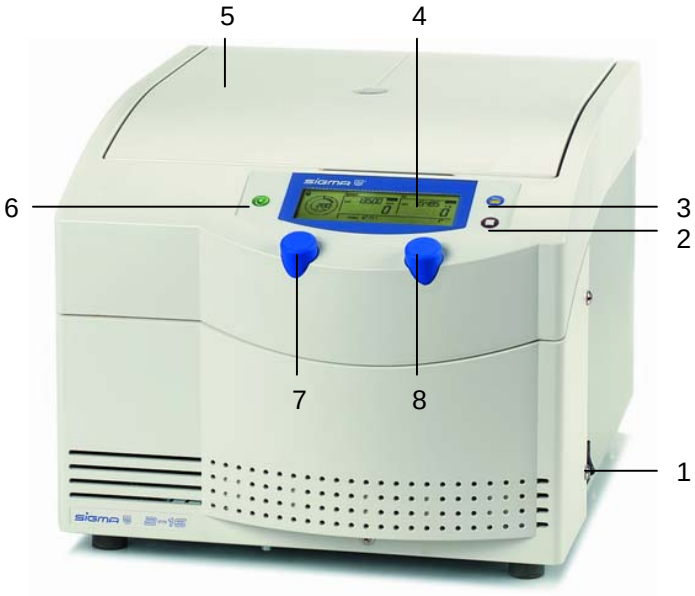

Fig. 5.1: Total view of the centrifuge

9 Name plate
10 Equipotential bonding screw
11 Mains power input

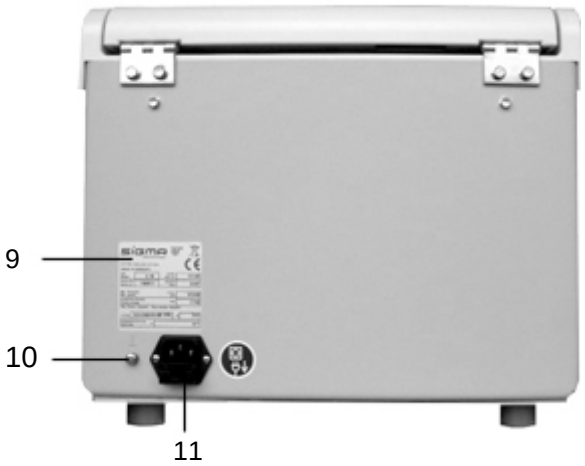

Fig. 5.2: Rear view of the centrifuge

5.1.2 Operating Panel

1 Start key
2 Time Display
3 Speed Display
4 RCF Display
5 Lid key
6 Stop key
7 Display for rotor, deceleration curve and programs
8 Rotary knobs

Fig.3: Operating Panel

The centrifuge is started directly via the operating panel. When the centrifuge is switched on, all of the operating keys and displays will be illuminated for a short time. It is now ready for operation.

5.1.2.1 Name Plate

1 Manufacturer and registered office
2 Type name
3 Serial number
4 Max. speed
5 Kinetic energy
6 Max. density
7 Nominal voltage
8 Input fuse
9 Symbol for special disposal (see chapter 8, page 51)
10 CE mark in accordance with the directive 94/9/EC
11 Part number
12 Year of manufacture
13 Power consumption

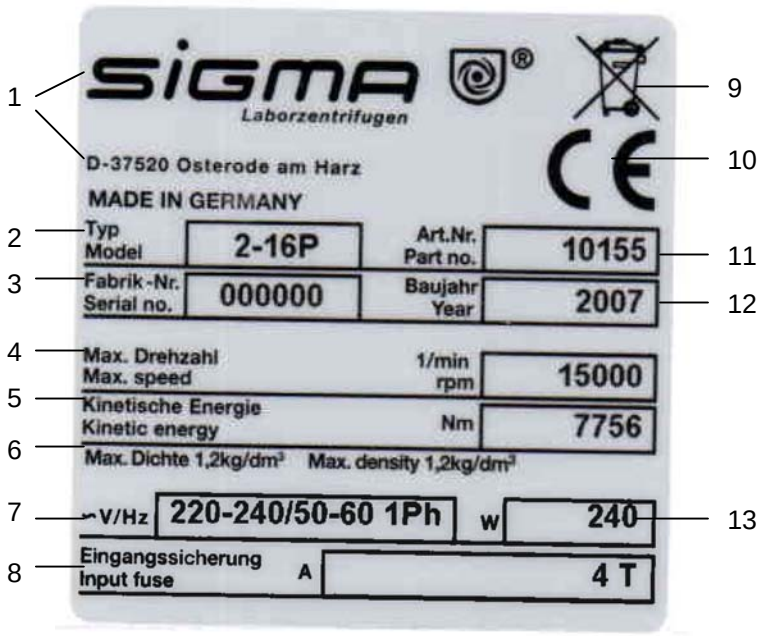

Fig. 5.4: Name plate

5.1.3 Construction and Constructive Safety Measures

The centrifuge is installed within a solid construction. On the back, the lid is secured by solid hinges and on the front by two separate lid locks.

5.1.4 Drive

The drive motor is a well-dimensioned, collector-less asynchronous motor.

5.1.5 Operation and Display

The display is a hermetically sealed LCD display. It is operated by way of two rotary knobs and indicates the operating statuses.

5.1.6 Electronic System

The microprocessor-controlled electronic system ensures a wide range of adaptations of the centrifuge for various tasks. The following parameters can be set:

- Speed in steps of 100 or 1 rpm
- Relative centrifugal force RCF in steps of 1 or 10 x g
- Time between 10 sec an 11h 59min max.
- Continuous run
- Short run
- Rotor preselection
- Acceleration and deceleration curves
- Storage and call-up of programs

5.1.7 Safety Devices

Apart from the mentioned passive safety devices due to the solid design, the following active precautions are in place for your safety:

5.1.7.1 Lid Lock and Lid Closing Device

The centrifuge can only be started when the lid is properly closed. The electrical locks must be locked. The lid can only be opened when the rotor has stopped. If the lid is opened by way of the emergency release system during operation, the centrifuge will immediately switch off and decelerate brakeless. If the lid is open, the drive is completely separated from the mains power supply, i.e. the centrifuge cannot be started (see 6.2.5 "Emergency Lid Release", page 45).

5.1.7.2 Standstill Monitoring

Opening of the centrifuge lid is only possible if the rotor is at a standstill. This standstill is checked by the microprocessor.

5.1.7.3 System Check

An internal system check monitors the data transfer and sensor signals with regard to plausibility. Errors are detected with extreme sensitivity and displayed as error messages with a number on the speed and rcf display (see 6.2.6 "Error Codes", page 46).

5.1.7.4 Ground Wire Check

For the ground wire check, there is an equipotential bonding screw on the rear panel of the centrifuge. A ground wire check can be carried out by authorized and specialized personnel using a suitable measuring instrument (see 4.2.2 "Connection“, page 24). Please contact the head of our service team (see 6.2.7 "Service Contact", page 46).

5.1.7.5 Imbalance Monitoring System

The "Imbalance" display may light up or emit a sound signal (see 5.3.8 “Activating/Deactivating the Sound Signal”, page 43) in order to indicate that the centrifuge is in the inadmissible imbalance range. If the rotor is loaded unevenly, the drive will be switched off in the acceleration phase or during the run. The message "Imbalance" and the error number 46 for "Imbalance“ will then flash on the display. The lid opens automatically after the rotor has come to a standstill. In both cases, loading has to be checked and balanced.

5.2 Initial Start-Up

Before the initial start-up, please ensure that your centrifuge is properly set up and installed (see 4.2 "Installation", page 24).

5.2.1 Switching the Centrifuge ON

- Press the mains power switch on the right side of the front (see Fig. 5.1, page 25).

The centrifuge display then illuminates.

5.2.2 Opening and Closing the Lid

The lid can be opened if the centrifuge is at a standstill and if the lid key is illuminated.

- Press the lid key in order to open the lid (see 5.3.7 "Activating/Deactivating the Automatic Lid Opening Function", page 43).

The centrifuge cannot be started if the lid is opened.

- To close the lid, press on the left and right side of the lid to ensure that both of the lid locks lock into place.

Attention!
A flashing lid key indicates that only one lid lock has locked.

5.2.3 Installation of Rotors

- Open the centrifuge lid by pressing the lid key.
- Unscrew the rotor tie-down screw from the motor shaft (anti-clockwise).
- Lower the rotor with its central bore straight down onto the motor shaft.
- Tighten the rotor tie-down screw clockwise with the supplied rotor wrench with 5 Nm. In doing so, hold the rotor at its outer rim.

- After frequent use, the rotor tie-down screw must be loosened by some turns and fastened again. This must be done once a day or after 20 cycles. This ensures a proper connection between the rotor and the motor shaft.
- The rotor tie-down screw should only be tightened when a rotor is installed in order to prevent the collet chuck from being expanded.

Attention!

- When using rotors for microtiter plate formats: Ensure that the plate holders are inserted together with the plates into the buckets.
- The lid screw serves for the fastening of the lid onto the rotor only, not for the fastening of the rotor onto the collet chuck. Prior to installing the lid, check for the tight fit (5 Nm) of the rotor tie-down screw.

Attention!

- **Please follow the safety instructions and hazard warnings in chapter 2, page 16 ff!**

5.2.3.1 Installation of Angle Rotors with a Hermetically Sealed Lid

- Screw the rotor cover onto the rotor and tighten it.
- Lower the rotor with the cover onto the motor shaft.
- Insert the rotor tie-down screw into the motor shaft. Tighten the rotor tie-down screw at 5 Nm using the supplied rotor wrench so that the spring washer assembly is compressed tightly.
- The rotor can also be used without a cover.
- Slightly grease the rotor and lid seals after cleaning.
- The rotors can be installed or removed with a closed lid after loosening the rotor tie-down screw.

Attention!

- **Please follow the safety instructions and hazard warnings in chapter 2, page 16 ff!**

1 Rotor tie-down screw
2 Lid
3 Lid seals

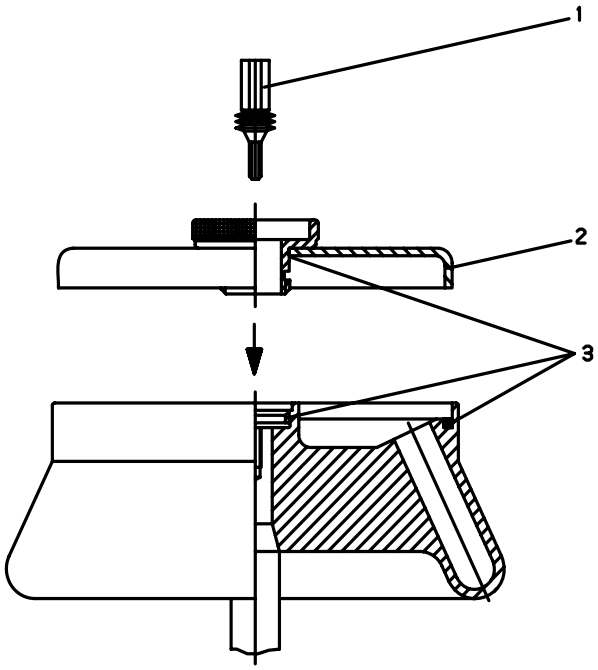

Fig. 5.5:
Angle rotor with a hermetically sealed lid

5.2.3.2 Installation of the Microhematocrite Rotor

- Lower the microhematocrite rotor with its central bore straight down onto the motor shaft.

- Tighten the rotor tie-down screw clockwise with the supplied rotor wrench. In doing so, hold the microhematocrite rotor with your left hand and tilt it slightly, if necessary, in order to prevent the motor shaft from slipping through.

- Check the rotor for a correct and tight fit.

- **Please consider the maximum permissible gravitational field of 12,000 x g. An excess gravitational field will result in an increased risk of glass breakage!**

Operation:

- Fill the capillary tubes with blood and seal them at one end with putty or by fusion.
- Place the capillary tubes into the recesses of the rotor with the sealed end against the rubber ring. Ensure that the capillary tubes fit tightly against the rubber ring. The opposite places must be loaded.
- Screw on the rotor cover.
- Close the centrifuge lid.
- Enter the following parameters: gravitational field RCF max. 12,000 x g, time 5 min
- Start the centrifuge.
- Open the centrifuge lid and rotor cover when the set time has elapsed.

Evaluation:

- Put the reader onto the rotor.
- Turn the reader and perform a fine adjustment with the aid of the central eccentric mechanism in order to localize the O-point and the maximum liquid point in the capillary tubes. You can now read the percentage value.
- Remove the capillary tubes. Some of the tubes can also be evaluated with the reader outside of the rotor (see the instructions for use on the back of the reader).

5.2.4 Installation of Accessories

- Only use vessels that are suitable for the rotor (see chapter 10 "Suitable Accessories", page 54).
- Load all of the compartments of the swing-out rotors.
- Always load the opposite compartments of the rotors with the same accessories and filling to avoid imbalance.
- Centrifugation with low capacity: For the example, a swing-out rotor (16 x 15 ml) that is to be equipped with eight tubes only was used. The tubes must be installed symmetrically so that the buckets and their suspensions are loaded evenly

Fig. 5.6: Permissible loading of the swing-out rotor

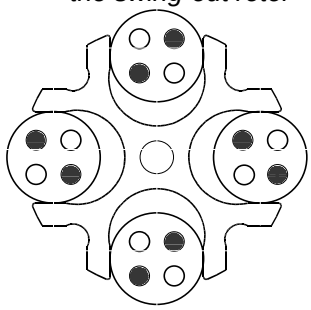

Centrifugation with different tube sizes: Working with different tube sizes is possible. In this case, however, it is very important that opposite inserts are identical. The example shows a swing-out rotor with buckets and 2 x the insert 100 ml and 2 x the insert 4 x 15 ml with the corresponding glass or plastic tubes.

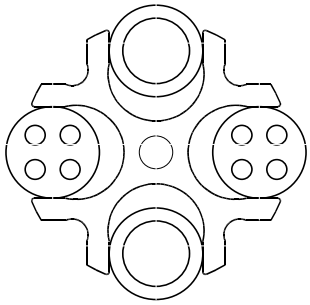

Fig. 5.7: Permissible loading of the swing-out rotor with different tube sizes

Another example is the angle rotor 24 x 2.2 ml: The tubes must be installed symmetrically so that the rotor is loaded evenly.

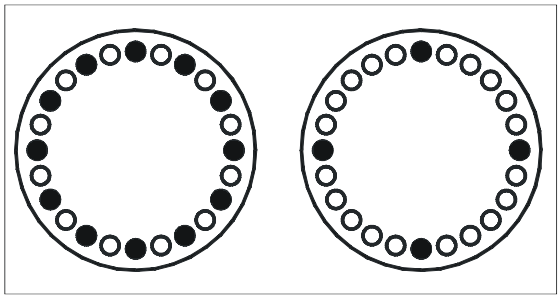

Fig. 5.8: Permissible loading of the angle rotor

5.2.4.1 Carrier Systems

In order to ensure easy handling, even if vessels of various sizes are used, a carrier system was developed.

- Load the opposite carriers with the same number of vessels and with the same weights in order to avoid imbalance.
- If all of the compartments of a carrier are not used, the buckets must be loaded evenly. Loading the edges of a bucket only is not permissible.

5.2.4.2 Tubes

- Load the tubes outside of the centrifuge. Liquids in the buckets or multiple carriers cause corrosion.
- Fill the tubes carefully and arrange them according to their weight. Imbalances result in the excessive wear of the bearings.
- In high-speed angle rotors, the vessels must be filled up to their useful volume (= the volume stated for the vessel). If the vessels are only partially filled, they will deform. This may result in leaks at the seals that may become loose.
- When using glass tubes, please refer to the information provided by the manufacturer concerning the maximum speed for glass tubes.

Attention!

- **Please observe the instructions on safety and hazards in chapter 2, page 16!**

5.2.5 Service Life of Rotors and Accessories

The rotors and accessories have a limited service life.

- Please perform regular checks (at least once per month) for safety reasons!
- Pay special attention to changes, such as corrosion, cracks, material abrasion etc.
- **After 10 years, they must be inspected by the manufacturer.**
- **After 50,000 cycles, the rotor must be scrapped for reasons of safety.**
- **If other data concerning the service life are engraved on the rotor or bucket, these data shall apply accordingly!**

5.2.6 Starting the Centrifuge

The centrifuge is ready for operation when the start key is illuminated.

- Press the start key in order to start a centrifugation run.

5.2.7 Interrupting a Centrifugation Run

- Press the stop key in order to interrupt a centrifugation run.

The centrifugation run will be terminated prematurely.

5.2.7.1 Interrupting a Deceleration Process

- Press the start key during a deceleration process in order to interrupt it and to restart the centrifuge.

5.2.7.2 Softstart and Softstop Function

The softstart function is used to extend the acceleration time, whereas the softstop function is used to extend the deceleration time. The current combination is shown on the display. The stop key can be used to cyclically select various combinations:

- Press the key once to active the softstart function.
- Press the key twice to activate the softstart function and the softstop function.
- Press the key three times to active the softstop function alone.
- Press the key four times to activate the softstart function and the brakeless deceleration. The “soft stop” display flashes when the brakeless deceleration is active.
- Press the key five times to activate the “brakeless deceleration” function alone (the “soft stop” display flashes).
- Press the key once more to return to the standard operating mode.

5.3 Display / Program Options

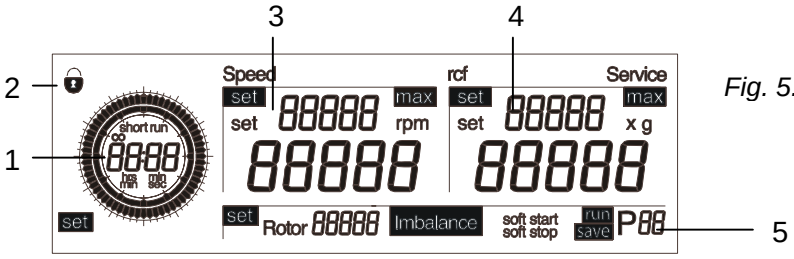

Fig. 5.9: Display completely active

The centrifuge display has the following display fields:

1 Time field
2 "Lock" symbol for lockdown
3 Speed field
4 RCF field
5 Field for rotor selection, imbalance indication, run mode, and program selection

5.3.1 Time

The runtime of the centrifuge can be set at different intervals in a range from 10 seconds to 11 hours and 59 minutes.

To select the desired centrifugation time:

- Turn the left rotary knob until “set” appears in the lower left area of the display (Fig. 5.10).
- Select the option by pressing or turning the right rotary knob. “Set” will now flash.
- Turn the right rotary knob until the desired duration is displayed.
- Press the right rotary knob in order to confirm the input. If this is not done, the value will be automatically reset to the last setting.

After 11:59 min, the display changes from “min:sec“ to “hrs:min“. The time can then be changed in steps of 10 minutes.

It is also possible to change the runtime during the centrifugation run.

Attention!
If the centrifugation time is changed during the run, the centrifuge will run for the entire new time and will disregard the previous runtime that has already elapsed.

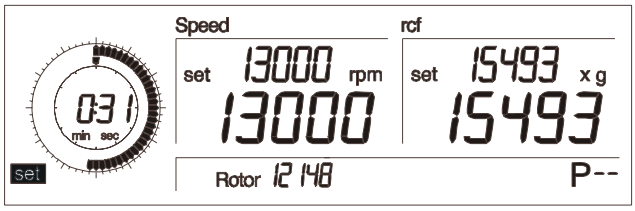

Fig. 5.10: Setting the time

5.3.1.1 Changing the Time Increments

In order to change the time in steps of 1 second (instead of in steps of 10 seconds in the min:sec mode) or in steps of 1 minute (instead of in steps of 10 minutes in the hrs:min mode):

- Keep the stop key pressed while setting the desired runtime with the right rotary knob.

5.3.1.2 Short Run

During the short run, the centrifuge accelerates at maximum power until the maximum speed is reached.

- Keep the start key pressed during the short run.

The message “short run” is displayed in the time display and the duration of the short run is also displayed (Fig. 5.11). When the start key is released, the centrifuge decelerates at maximum power to a standstill.

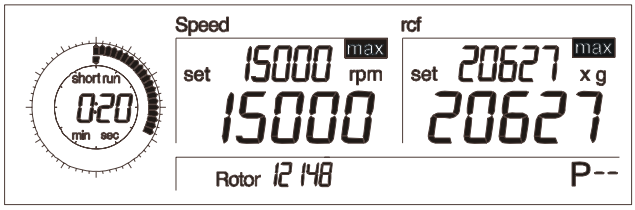

Fig. 5.11: Short run display

5.3.1.3 Continuous Run

During the continuous run, the runtime of the centrifuge is unlimited and must be stopped manually. The centrifuge accelerates during the continuous run until the set speed is reached.

To start the continuous run of the centrifuge:

- Starting with the time setting 0:10 (see 5.3.1, page 36), turn the knob anti-clockwise.

Or:

- Starting with the time setting 11:59, turn the knob clockwise to the next setting. The message “cont” and the symbol "∞" will be displayed (Fig. 5.12).

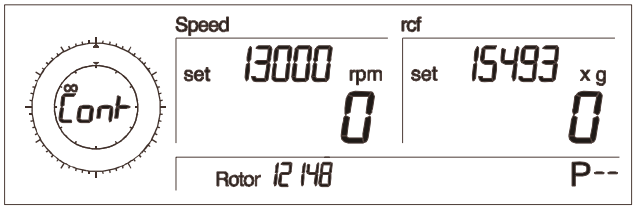

Fig. 5.12: Continuous run display

5.3.2 Speed

The desired speed of the centrifuge (revolutions per minute) can be set here (15,000 rpm in the example shown below). When the maximum permissible speed of the rotor is reached, the “max” display lights up.

To preselect a speed value:

- Turn the left rotary knob until “set” appears in front of the parameter “Speed” on the display (Fig. 5.13).
- Select the option by pressing or turning the right rotary knob. “Set” will now flash.
- Turn the right rotary knob until the desired value is displayed.
- Press the right rotary knob to confirm the selected value. If this is not done, the value will be automatically reset to the last setting.

It is possible to change the speed value during the centrifugation run.

The values fort he rotor combinations can be found in chapter 10 “Suitable Accessories” on page 56 ff.

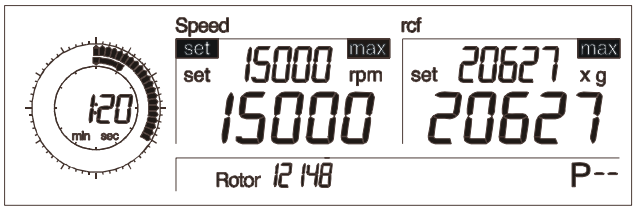

Fig. 5.13: Setting the speed

5.3.2.1 Changing the Speed Increments

In order to change the speed in steps of 1 rpm (instead of in steps of 100 rpm):

- Keep the stop key pressed while setting the desired speed with the right rotary knob.

5.3.3 Relative Centrifugal Force (RCF)

The relative centrifugal force (RCF) is the acceleration that the sample is subject to.

The RCF value is determined by the rotor geometry and speed. The RCF and speed values, therefore, depend on each other. When the maximum permissible RCF value of the rotor ist reached, the "max" display lights up.

To preselect the RCF value:

- Turn the left rotary knob until “set” appears in front of the parameter “rcf” on the display (Fig. 5.14).
- Select the option by pressing or turning the right rotary knob. "Set" will now flash.
- Turn the right rotary knob until the desired value is displayed.
- Press the right rotary knob to confirm the selected value. If this is not done, the value will be automatically reset to the last setting.

It is also possible to change the RCF value during a centrifugation run.

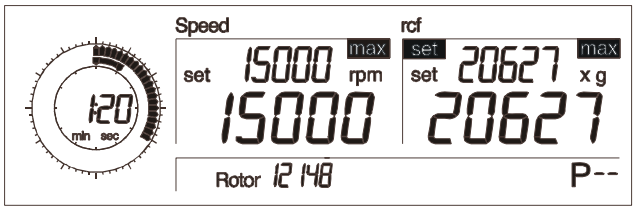

Fig. 5.14:
Setting the relative centrifugal force

5.3.3.1 Changing the RCF Increments

In order to change the RCF value in Stepps of 1 x g (instead of in Stepps of 10 x g):

- Keep the stop key pressed while setting the desired RCF value with the right rotary knob.

5.3.4 Rotor Preselection

The centrifuge SIGMA 2-16P is equipped with an automatic rotor identification system. After the installation of the rotor, the rotor ID will be displayed. It is also possible to manually preselect the rotor. This is only possible at a standstill.

To select a rotor:

- Turn the left rotary knob until “set” appears in front of the option “Rotor” on the display (Fig. 5.15).
- Select the option by pressing or turning the right rotary knob. "Set" will now flash.
- Turn the right rotary knob until the desired rotor number is displayed.
- Press the right rotary knob to confirm the input. If this is not done, the value will be automatically reset to the last setting.

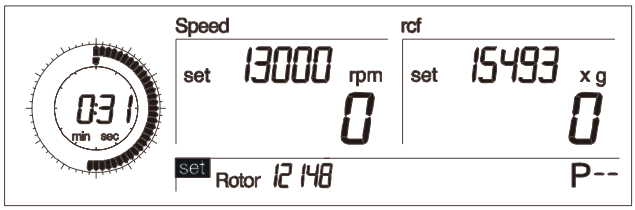

Fig. 5.15: Preselection of a rotor

Attention – special case!!!

If the rotors 12072 or 12107 are not preselected, rotor 12073 will be automatically displayed for rotor 12072, and rotor 12133 for rotor 12107.

This setting does not cause any problems fort he centrifugation since the suggested rotors have the same maximum speed.

5.3.5 Program

The program is used to save or load certain recurrent settings of the centrifuge. This saves time and prevents typing errors. 50 different programs can be saved and called up. This is only possible at a standstill.

5.3.5.1 Saving the Current Settings

To save the current settings:

- Turn the left rotary knob until “save” appears on the display (Fig. 5.16).
- Select the option by pressing the right rotary knob. “Save” will now flash.
- Turn the right rotary knob until the desired program number is displayed. Empty storage location numbers flash.
- Press the right rotary knob to confirm the input.

The settings are now saved under this program number (program number 8 in the example).

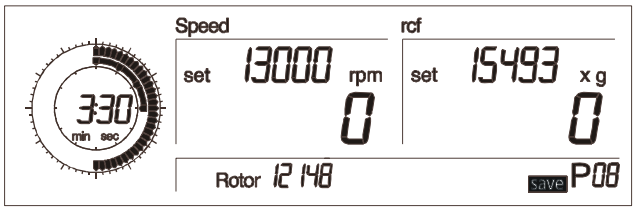

Fig. 5.16: Saving programs; here program number 8

5.3.5.2 Calling Up Stored Programs

If necessary, the saved programs can be called up:

- Turn the left rotary knob until “run” appears on the display (Fig 5.17).
- Select the option by pressing the right rotary cursor. “Run” will now flash.
- Turn the right rotary knob until the desired program number is displayed.
- Press the right rotary knob to confirm the input.

The saved program settings will be adopted.

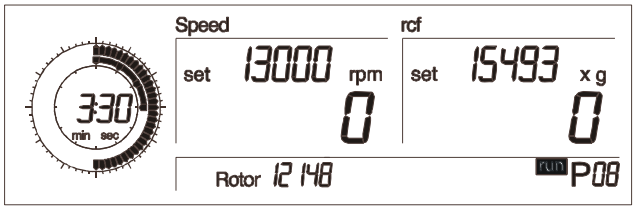

Fig. 5.17: Calling up stored programs; here program number 8

5.3.6 Lockdown

This function locks the parameters against all inadvertent changes.

- Turn the left rotary knob until a padlock symbol is displayed in the upper left corner of the display (Fig. 5.18).

As long as the padlock symbol is displayed, the parameters cannot be changed.

5.3.6.1 Permanent Lockdown

The parameter settings can also be locked with the help of the start key when the lid is open:

- Press the start key three times and on the third time hold it down for approx. two seconds.

After the activation of the function, the padlock symbol (Fig. 5.18) will flash. Now the centrifuge can be started and stopped, but the settings cannot be changed.

- Proceed in the same way in order to deactivate the function.

The current status remains active even if the centrifuge is switched off with the help of the mains power switch.

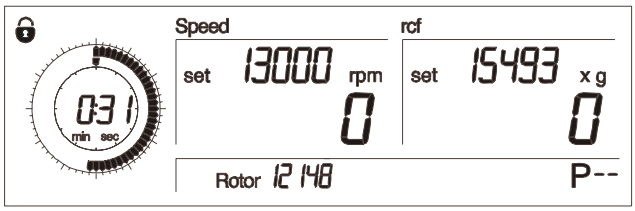

Fig. 5.18: Padlock symbol

5.3.7 Activating/Deactivating the Automatic Lid Opening Function

The Auto-Lid-Open function must be activated so that the lid opens automatically at the end of the operation:

- Press the lid key three times when the lid is open and on the third time hold it down for approx. two seconds.
- Proceed in the same way in order to deactivate the function.

After every change, the current status of the setting is displayed in the form of a message running over the display ("Auto-Lid-Open on" or "off").

5.3.8 Activating/Deactivating the Sound Signal

If this function is active, a sound signal can be heard at the end of the operation as well as in the event of an error message or imbalance.

- Press the lid key five times and on the fifth time hold it down for approx. two seconds.
- Proceed in the same way in order to deactivate the function.

After every change, the current status of the setting is displayed in the form of a message running in the display ("Buzzer on" or "off").

6 Malfunctions and Error Correction

6.1 Error Mode

Malfunctions are indicated by error messages with a number in the speed and rcf display. If the sound signal is activated, it sounds when the error message is displayed (see 5.3.8 "Activating/Deactivating the Sound Signal", page 43).

6.2 Error Correction

- Eliminate the source of the problem (see 6.2.1 to 6.2.6, page 44 ff).
- Acknowledge the error messages with the lid key.

6.2.1 No Indication on the Display

– Voltage in the socket?	• Check fuse in the mains supply.
– Power cord plugged in and line voltage present?	• Plug in power cord correctly.
– Fuse OK?	• Replace fuse (see fig. 5.4 "name plate", page 26).
– Mains power switch on?	• Switch on power.
– Lid closed?	• Close lid (see 6.2.4 “Lid cannot be opened", page 45).

6.2.2 Centrifuge cannot be started

– Start key LED not illuminated:	• Power off/on. If the error occurs again, call the service.
– Lid key LED flashes:	• Open and close the lid again. If error occurs again although both locks are locked, call the service.

6.2.3 Centrifuge decelerates during Operation

– There was a brief mains power failure (at least 2 sec), error message 61	• Press the start key in order to restart the centrifuge.
– Centrifuge displays an error from 1 to 11 after powering on.	• Power off/on (see 6.2.6 "Error Codes", page 46). If the error occurs again, call the service.

6.2.4 Lid cannot be opened

– When first trying to open the lid, the locks are not released. Lid key LED flashes.	• Close the lid again. Press down both sides of the lid until the locks audibly lock. Open the lid again. If the error occurs again, unlock the lid manually (see 6.2.5 "Emergency lid release", page 45) and call the service.
– The lid cannot be opened, although both locks have audibly unlocked.	• Check/clean the lid seal. Apply talcum powder to the seal to avoid sticking.

6.2.5 Emergency Lid Release

In the event of a power supply failure, it is possible to manually open the centrifuge lid using two stoppers that are secured with screws. They are located on the front of the bottom panel.

- Switch off the mains power switch and disconnect the power cord from the socket.
- Unscrew the screws in the stoppers.
- Remove the stopper, e.g. with a screwdriver.
- Pull the visible strings in order to release the lid. Then, reinsert the stoppers into the openings.
- Reinsert the screws centrally.

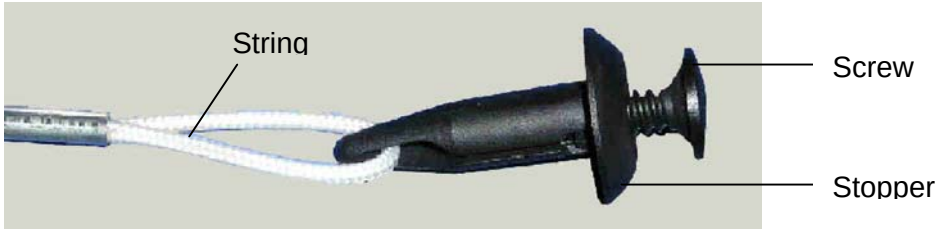

Fig. 6.1: Screw for the emergency lid release

The lid may only be unlocked and opened when the rotor is at a standstill.

If the lid is opened by way of the emergency lid release during operation, the centrifuge will be switched off immediately and decelerate brakeless.

6.2.6 Error Codes

Error no.	Kind of error	Measure	Note
1-9	System error	• allow to slow down • power off/on	All these errors stop the centrifuge or cause it to slow down.
10-19	Speedometer error	• allow to slow down • power off/on	
20-29	Motor error	• power off/on • ensure ventilation	
30-39	EEPROM error	• allow to slow down • power off/on	With errors 34,35,36, the centrifuge will stop. With errors 37,38, error message only.
40-45	Temperature error (only for refrigerated centrifuges)	• allow to slow down • power off/on • allow to cool down • provide better ventilation	
46-49	Imbalance error	• allow to slow down • power off • eliminate the imbalance	
50-59	Lid error	• press lid key • close lid • remove foreign matter from the opening of the lid lock device	With error 50 and 51, the centrifuge will stop.
60-69	Process error	• allow to slow down • power off/on	With error 60, message “power failure during run”. With error 61, message “stop after power on”.
70-79	Communication error	• allow to slow down • power off/on	
80-99	Parameter error	• allow to slow down • provide for better ventilation • power off/on	With error 83, error message only.

Fig.6.2: Error Codes

Attention!

If it is impossible to eliminate the errors, please call the service!

6.2.7 Service Contact

Please contact your supplier for support or in the event of malfunctions and the supply of spare parts:

SIGMA Laborzentrifugen GmbH
An der Unteren Söse 50
37520 Osterode

Service	+49 55 22 50 07-8425	service@sigma-zentrifugen.de
Zentrale	+49 55 22 50 07-0	info@sigma-zentrifugen.de

7 Care and Maintenance

7.1 Cleaning and Care

The centrifuge, rotor, and accessories are subject to high mechanical stress. Thorough maintenance care performed by the user extends the service life and prevents premature failure.

Attention!

If corrosion or other damage occurs due to improper care, the manufacturer cannot be held liable or subject to any warranty claims.

- Use soap water or other water-soluble, mild cleaning agents (pH value between 6 and 8).
- Avoid corrosive and aggressive substances.
- Do not use alkaline solutions or solvents.
- Do not use agents with abrasive particles.
- Do not expose the centrifuge and rotors to intensive UV radiation or thermal stress (e.g. by heat generators).

7.1.1 Centrifuge

- Disconnect the power cord from the socket before cleaning.
- Carefully remove all liquids, including water and particularly all the solvents, acids, and alkaline solutions from the centrifuge chamber using a cloth in order to avoid damage to the motor bearings.
- If the centrifuge has been contaminated with toxic, radioactive, or pathogenic substances, clean the centrifuge chamber immediately with a suitable decontamination agent (depending on the type of contamination). **Take suitable precautions for your own safety if there is a risk of toxic, radioactive, or pathogenic contamination.**
- Grease the motor shaft slightly after cleaning (grease for load-bearing bolts part no. 70284).
- Open the centrifuge when it is not in use so moisture can evaporate. This prevents the increased wear of the motor bearings.

7.1.2 Accessories

For the care of the accessories, special safety measures must be considered as these are measures that will ensure operational safety at the same time.

- Immediately rinse off the rotor, buckets, or accessories if any liquids that may cause corrosion come into contact with them.
- Clean the accessories outside the centrifuge once a week or preferably after each use. Rubber cushions should be removed.
- If the rotors or accessories have been contaminated with toxic, radioactive, or pathogenic substances, clean them immediately with a suitable decontamination agent (depending on the type of contamination). **Take suitable precautions for your own safety if there is a risk of toxic, radioactive, or pathogenic contamination.**
- Dry the accessories with a soft cloth or in a drying chamber at approx. 50°C.

7.1.2.1 Plastic Accessories

- If solvents, acids, or alkaline solutions have been used, clean the plastic accessories thoroughly. The chemical resistance of plastic decreases with rising temperatures (e.g. during drying).

7.1.2.2 Aluminum Accessories

Especially aluminum parts are susceptible to corrosion.

- Acid-containing cleaning agents and alkaline cleaning agents must be avoided (see 7.1 "Cleaning and Care", page 47).
- Grease aluminum parts at least once a week with slushing oil (part no. 70104).

This essentially increases their service life and reduces susceptibility to corrosion.

7.1.3 Rotor, Buckets, and Multiple Carriers

Rotors, buckets, and multiple carriers are produced with highest precision, in order to withstand the permanent high stress with high gravitational fields.

Chemical reactions as well as stress-corrosion (combination of oscillating pressure and chemical reaction) can affect or destroy the metals. Barely detectable cracks on the surface can expand and weaken the material without any visible signs.

- Check the material regularly (at least once a month) for
  - cracks
  - visible damage of the surface
  - pressure marks
  - signs of corrosion
  - other changes.

- Check the bores of the rotors and multiple carriers.

- Replace any damaged components immediately for your own safety.

- Protect the rotors, lid seals, and rubber cushions (if included) at least once per week with the supplied slushing oil (part no. 70104).

- Grease the rotor tie-down screw with grease for load-bearing bolts (part no. 70284).

7.1.3.1 Microhematocrite Rotor

- Remove the microhematrocrite rotor for cleaning.

- Wipe the centrifuge chamber clean.

- Replace the rubber ring in the event of wear or glass breakage (part no. 16001 for rotor 11409).

7.1.4 Load-bearing Bolts

Only greased load-bearing bolts ensure the even swinging of the buckets, and therefore, the quiet run of the centrifuge. Ungreased bolts can lead to a system shut-down due to imbalances.

- Grease the load-bearing bolts of the rotor after each cleaning slightly with grease for load-bearing bolts (part no. 70284).

7.1.5 Glass Breakage

- Glass particles will damage the surface coating (e.g. Eloxal) of the buckets, which will then lead to corrosion.
- Glass particles in the rubber cushions of the buckets will cause glass breakage again.
- Glass particles on the pivot bearing of the load-bearing bolts prevent the buckets and carriers from swinging evenly, which will cause an imbalance.
- Glass particles in the centrifuge chamber will cause metal abrasion due to the strong air circulation. This metal dust will not only pollute the centrifuge chamber, rotor, and materials to be centrifuged but also damage the surfaces of the accessories, rotors, and centrifuge chamber.

In the case of glass breakage, immediately remove all glass particles (e.g. with a vacuum cleaner). Replace the rubber cushions since even thorough cleaning will not remove all glass particles.

In order to completely remove the glass particles and the metal dust from the rotor chamber:

- Grease the upper third of the centrifuge chamber with e.g. Vaseline.
- Then, let the rotor rotate for a few minutes at a moderate speed (approx. 2,000 rpm). The glass and metal particles will now collect at the greased part and can easily be removed with a cloth together with the grease.
- Remove the grease with glass and metal particles with a cloth.
- If necessary, repeat this procedure.

7.2 Sterilization and Disinfection of the Rotor Chamber and Accessories

- Use commercially-available disinfectants such as, for example, Sagrotan®, Buraton®, or Terralin® (available at chemist's shops or drugstores).
- The centrifuges and the accessories consist of various materials. A possible incompatibility must be considered.
- Before using cleaning or decontamination agents that were not recommended by us, contact the manufacturer to ensure that such a procedure will not damage the centrifuge.
- For autoclaving, consider the continuous heat resistance of the individual materials (see 7.2.1 "Autoclaving", page 51). Please contact us if you have any queries (see 6.2.7 "Service Contact", page 46).

If dangerous materials (e.g. infectious and pathogenic substances) are used, the centrifuge and accessories must be disinfected.

7.2.1 Autoclaving

The service life of the accessories essentially depends on the frequency of autoclaving and use.

- Replace the accessories immediately when the parts show changes in color or structure or in the occurrence of leaks etc.
- During autoclaving, the caps of the tubes must not be screwed on in order to avoid the deformation of the tubes.

It cannot be excluded that plastic parts, e.g. lids or carriers, may deform during autoclaving.

Autoclaving:

Accessories	**max. temp. °C**	**min. time min**	**max. time min**	**max. cycles**
Glass tubes	134-138	3	40	-
Polycarbonate tubes	115-118	30	40	20
Polypropylene tubes	115-118	30	40	30
Teflon tubes	134-138	3	5	100
Aluminum rotors	134-138	3	5	-
Polycarbonate/Polyallomer lids for angle rotors	115-118	30	40	20
Polysulfone lids for angle rotors	134-138	3	5	100
Aluminum buckets	134-138	3	5	-
Polycarbonate caps for buckets	115-118	30	40	50
Polypropylene caps for buckets	115-118	30	40	50
Polysulfone caps for buckets	134-138	3	5	100
Rubber adapters	115-118	30	40	-
Rubber cushions	115-118	30	40	-
Round carriers made of polypropylene	115-118	30	40	-
ditto, made of polyallomer and polycarbonate	115-118	30	40	-
Rectangular carriers made of polypropylene	115-118	30	40	-
ditto, made of polyallomer and polycarbonate	115-118	30	40	-

Fig. 7.1: Autoclaving table

8 Disposal

8.1 Disposal of the Centrifuge

In accordance with the directive 2002/96/EC, SIGMA centrifuges are marked with the symbol shown to the left. This symbol means that it is not permissible to dispose of the unit among household trash.

- You can return these centrifuges free of cost to SIGMA Laborzentrifugen GmbH.
- Please ensure that the unit is decontaminated.
- Please fill in the enclosed declaration of decontamination.
- Please comply with any other applicable local rules and regulations.

8.2 Disposal of the Packaging

- Use the packaging to return the centrifuge for disposal.

Or:

- Dispose of the packaging, after having separated the individual materials.
- Please comply with all local rules and regulations.

9 Warranty and Liability

The warranty and liability are subject to our "General Conditions" that were distributed to the operator upon the conclusion of the contract.

Warranty and liability claims are excluded if they are due to:

- Improper use
- Non-compliance with the safety instructions and hazard warnings in the operating manual
- Force majeure

10 Suitable Accessories

Part no.	Description	Max. speed (min^{-1})	Max. gravitatinal field (x g)
11124	Swing-out rotor 24 x 1.5-2.2 ml for reaction vials e.g. 15008, 15040, incl. hermetic aluminium lid, max. radius 7.4 cm, min. radius 3.5 cm	12 500	12 927
11409	Microhematocrite rotor for 24 capillary tubes 1.5 x 75 mm, 50 µl, incl. reader 17029, max. radius 9 cm, min. radius 1.5 cm	12 000	14 489
15001	Microhematocrite capillary tubes, heparinized, 1.5 x 75 mm, 50 µl, 200 pcs.		
17005	Capillary sealing putty (6 plates)		
17024	Reader for use with microhematocrite rotor		
17029	Reader for 1 capillary tube		
17004	Magnifying glass		
12139	Angle rotor 6 x 27-30 ml for sealed tubes e.g. 15029, 15030, 15032, incl. hermetic aluminium lid, max. radius 7.8 cm, min. radius 2.1 cm, angle 30°	13 500	15 893
☝	**Attention!** Rotors from batch number 201/00 may be run with lid, rotors of older batches (e.g. 15/00 or ../99) have to be run without lid		
12141	Angle rotor 10 x 10-12 ml for sealed tubes e.g. 15000, 15010, 15039, incl. hermetic aluminium lid, max. radius 7.6 cm, min. radius 2.8 cm, angle 35°	13 500	15 485
12148	Angle rotor 24 x 1.5-2.2 ml for reaction vials e.g. 15008, 15040, incl. hermetic aluminium lid, max. radius 8.2 cm, min. radius 4.9 cm, angle 45°	15 000	20 627
12133	Angle rotor 30 x 1,5-2,2 ml for reaction vials e.g. 15008, 15040, incl. Hermetic aluminium lid, max. radius 10 cm, min. Radius 6.7 cm, angle 45°	12 000	16 099
12107	Angle rotor incl. Hermetic lid, aluminium, for 12 strips with 8 PCR-tubes 0.2 ml, max. radius 9.8 cm, min. radius 7.2 cm, angle 45°	12 000	15 777
12072	Angle rotor 20 x 15 ml incl. buckets 13011, for round or conical tubes, max. ∅ 17 x 120 mm, e.g. 15015, 15020, 15023, 15024, Monovettes, culture tubes 15 ml 15115, max. radius 13.9 cm, min. radius 8 cm, angle 33°	4 000	2 486

Part no.	Description	Max. speed (min^{-1})	Max. gravitatinal field (x g)
12073	Angle rotor 30 x 15 ml incl. buckets 13011, for round or conical tubes, max. ∅ 17 x 120 mm, e.g. 15015, 15020, 15023, 15024, Monovettes, culture tubes 15 ml e.g.15115, 2 lines, angle 33°		
	max. radius 13.9 cm, min. radius 7.8 cm,	4 000	2 486
	max. radius 11.6 cm, min. radius 5.8 cm	4 000	2 075
12071	Angle rotor for 6 culture tubes 50 ml, e.g. 15151, and 12 culture tubes 15 ml, e.g. 15115 (Nunc, Corning, Falcon, Greiner), angle 35°,		
	max. radius 50 ml: 10.2 cm	4 000	1 825
	max. radius 15 ml: 12.6 cm	4 000	2 254
12151	Angle rotor for 6 culture tubes 50 ml (Nunc, Corning, Falcon, Greiner) e.g. 15151, incl. hermetic aluminium lid, max. radius 9.5 cm, min. radius 3 cm, angle 28°	7 800	6 462
13060	Adapter for 1 culture tube 15 ml (Nunc, Corning, Falcon, Greiner) e.g. 15115, suitable for 12151, 13150		
13079	Bottom adapter for 1 tube 40-42 ml 15051, 15052, 15054, suitable for 12151		
11190	Swing-out rotor 4 x 100 ml, complete, consisting of rotor 11192, 4 buckets 13097, 4 glass tubes 15100 and 4 rubber cushions 16051, max. radius 13.5 cm, min. radius 5 cm	4 500	3 056
11191	Swing-out rotor 16 x 15 ml, complete, consisting of rotor 11192, 4 multiple carriers 13012, 16 polystyrene tubes 15020 and 16 rubber cushions 16015, max. radius 13.4 cm, min. radius 5.1 cm	4 500	3 034
11192	Swing-out rotor for 4 buckets or multiple carriers 13009, 13012, 13041, 13042, 13097, 13150, 13152	4 500	3 056/ 3 034

Buckets and multiple carriers for 11192

Part no.	Description	Max. speed (min^{-1})	Max. gravitational field (x g)
13009	Multiple carrier, aluminium, for 5 tubes 5 ml, max. ∅ 12.5/16.5 x 65 - 85 mm, flat and round bottom tubes, e.g. 15060, Vacutainer tubes		
13012	Multiple carrier, aluminium, incl. rubber cushion 16015, for 4 tubes 5-15 ml, max. ∅ 17 x 90 - 110 mm, e.g. 15015, 15020, 15023, 15024, Monovettes		
13042	Multiple carrier, aluminum, incl. rubber cushion 16015, for 6 tubes 5-15 ml, max. ∅ 17 x 90 - 110 mm, e.g. 15015, 15020, 15023, 15024, Monovettes		
13097	Bucket, aluminium, incl. rubber cushion 16051, for 1 tube 100 ml, max. ∅ 45.5 x 95 - 105 mm, e.g. 15100, 15102, 15103, 15106 and Adapter 17925, 17950		
17925	Adapter for 1 glass tube 25 ml 15025, 15026, suitable for 13097		
17950	Adapter for 1 glass tube 25 ml 15025, 15026, suitable for 13097		
13041	Bucket, aluminium, incl. screw cap 17130, for round carriers 14029, 14030, 14031, 14032, 14033, 14034, 14035, max. length of tubes 110 mm		
14028	Round carrier for 4 reaction vials 1.5/2.2ml, max. Ø 11 mm, e.g. 15008, 15040		
14029	Round carrier for 5 tubes 5-7 ml, max. ∅ 12.5/15 x 65 - 105 mm, e.g. 15007, 15027, 15060, hemolyse tubes, polypropylene, suitable for 13041		
14033	Round carrier for 4 tubes 5 ml, ∅ 13.5/17.5 x 70 - 110 mm, e.g. Hämolyse-, Vacutainer-, RIA-tubes, polypropylene, suitable for 13041		
14034	Round carrier for 3 tubes 10-15 ml, max. ∅ 17.3/19 x 80 - 110 mm, e.g. 15020, 15023 and Monovettes 9 and 10 ml, polyethylene, suitable for 13041		
14030	Round carrier for 4 tubes 10-12 ml, max. ∅ 16.2/17.5 x 80 - 110 mm, e.g. 15000, 15010, 15015, 15024, 15039, polyethylene, suitable for 13041		
14031	Round carrier for 1 glass tube 25 ml, max. ∅ 25/30 x 70 - 105 mm, e.g. 15025, 15026, 15033, polypropylene, suitable for 13041		

Part no.	Description	Max. speed (min^{-1})	Max. gravitational field (x g)
14035	Round carrier for 1 tube with flat bottom or skirt, approx. 30 ml, max. Ø 25/31 x 65 - 95 mm, incl. cap, e.g. steriline tube 30 ml, Barloworld Scientific Ltd., polypropylene, suitable for 13041		
14032	Round carrier for 1 tube 50 ml, max. ∅ 35/38 x 70 - 105 mm, e.g. 15049, 15050, 15056, polypropylene, suitable for 13041		
17130	Sealing cap, polysulfone, clear, for 13041		
13150	Bucket, aluminium, incl. screw cap 17151, for 1 culture tube 50 ml (Nunc, Corning, Falcon, Greiner) e.g. 15151, max. radius 14.4 cm, min. radius 4.3 cm	4 500	3 260
17151	Sealing cap, polysulfone, clear, for 13150		
13060	Adapter for 1 culture tube 15 ml 15115, suitable for 12151, 13150, 19776		
13152	Multiple carrier, aluminum, for 2 culture tubes 15 ml (Nunc, Corning, Falcon, Greiner),e.g. 15115, max. radius 14.3 cm, min. radius 3.3 cm	4 500	3 237
11122	Swing-out rotor for microtiter plates incl. 2 carriers 13222, radius edge 12.3 cm, radius max. 10.5 cm, radius min. 6.5 cm, max. plate height 56 mm	3 000	1 238 1 057 654
11123	Swing-out rotor for microtiter plates, incl. 2 carriers 13223, radius edge 11.9 cm, radius max. 10 cm, radius min. 6.5 cm, max. plate height 48 mm	4 000	2 129 1 789 1 163

Adaptors, Plastic Vessels and stainless steel vessels

Part no.	Description
13000	Adapter for reaction vials 0.25-0.4 ml 15014, suitable for 11124, 12133, 12148, polyallomer
13002	Adapter for reaction vials 0.5-0.75 ml 15005, Ø 7.9/10 x 28/31 mm, suitable for 11124, 12133, 12148, polyallomer

Part no.	Description
13021	Adapter for PCR-tube 0.2 ml, ∅ 5.85/6.95 x 20/23.4 mm, suitable for 11124, 12132, 12148, polyallomer
13059	Adapter for 1 tube with screw cap 10-12 ml, max. Ø 16.2/19 x 75 - 85 mm, e.g. 15000, 15010, 15039, suitable in 12139
15014	Reaction vials 0.4 ml (Beckman system), polypropylene, 1 pack contains 100 pcs., suitable for 13000
15005	Reaction vials 0.5 ml, Ø 7.9/10 x 28/31 mm, 1 pack contains 100 pcs., suitable for 13002
15008	Reaction vials 1.5 ml, 1 pack contains 100 pcs., suitable for 11124, 12133, 12148
15040	Reaction vials 2.2 ml, 1 pack contains 100 pcs., suitable for 11124, 12133, 12148
15010	Polycarbonate tube with screw cap 12 ml, ∅ 16.1 x 81.1 mm, suitable for 12141, 13059
15000	ditto, Teflon
15039	ditto, polypropylene
15020	Polystyrene tube 15 ml, ∅ 17 x 100 mm, suitable for 11191, 12072, 12073, 13012, 14030, 14034
15021	Polypropylene stopper for 15020, 15023
15023	Polypropylene tube 15 ml, ∅ 17 x 100 mm, suitable for 12072, 12073, 13012, 14030, 14034
15115	Culture tube with screw cap 15 ml, pointed bottom, suitable for 12072, 12073, 13060
15029	Teflon tube with screw cap 28 ml, Ø 25.3 x 96 mm, 12139, 14031
15030	Polycarbonate tube with screw cap 30 ml, ∅ 25.3 x 98 mm, suitable for 12139, 14031
15032	Polypropylene tube with screw cap 28 ml, ∅ 25.3 x 92 mm, suitable for 12139, 14032
13079	Bottom adapter for 1 tube 40-42 ml 15051, 15052, 15054, suitable for 12151
15049	Polycarbonate tube 50 ml, graduated 0 - 50 ml in steps of 1 ml, ∅ 34 x 100 mm, suitable for 17950
15051	Teflon tube with screw cap 42 ml, ∅ 28.5 x 107 mm, suitable for 13079

Part no.	Description
15052	Polypropylene tube with screw cap 42 ml, ∅ 28.8 x 107 mm, suitable for 13079
15054	Polycarbonate tube with screw cap 40 ml, ∅ 28.8 x 107 mm, suitable for 13079
15151	Culture tube with screw cap 50 ml, pointed bottom, suitable for 12151, 13150
15102	Polypropylene tube 120 ml, ∅ 45 x 100 mm, suitable for 13097
15103	Polycarbonate tube 110 ml, ∅ 45 x 100 mm, graduated 2 - 100 ml in steps of 2 ml, suitable for 13097

Centrifuge glass tubes

Part no.	Description
15007	Centrifuge glass tube 7 ml, ∅ 12 x 100 mm, suitable for 13004, 14029
15027	ditto, graduated, 0 - 5.5 ml in steps of 0.1 ml
15015	Centrifuge glass tube 15 ml, ∅ 16 x 100 mm, suitable for 12072, 12073, 13012, 14030
15024	ditto, graduated, 0 - 10 ml in steps of 0.1 ml
15025	Centrifuge glass tube 25 ml, ∅ 24 x 100 mm, suitable for 13022, 14031, 17925
15026	ditto, graduated, 5 - 25 ml in steps of 1 ml
15050	Centrifuge glass tube 50 ml, ∅ 34 x 100 mm, suitable for 14032, 17950
15056	ditto, graduated, 4 - 50 ml in steps of 1 ml
15100	Centrifuge glass tube 100 ml, ∅ 44 x 100 mm, suitable for 11190, 13097
15106	ditto, graduated, 1 - 100 ml in steps of 1 ml

Further accessories available upon request.

Maximum speed for tubes:

Some tubes, such as centrifuge glass tubes, microtubes, culture tubes, fluoropolymer tubes and especially high-volume tubes can be used in our rotors, buckets, and adapters at higher speeds than their breaking limit.

- Always fill the tubes up to their useful volume (= the volume that is stated for the tube).
- Follow the manufacturer's recommendations.

10.1 Graphical Representation of the Rotors

The graphical representation of the rotors shows the maximum and minimum radii of the accessories used. If necessary, the values must be manually calculated (see 11.1.1 “RCF”, page 62).

Fig. 10.1: Minimum and maximum radius of a swing-out rotor

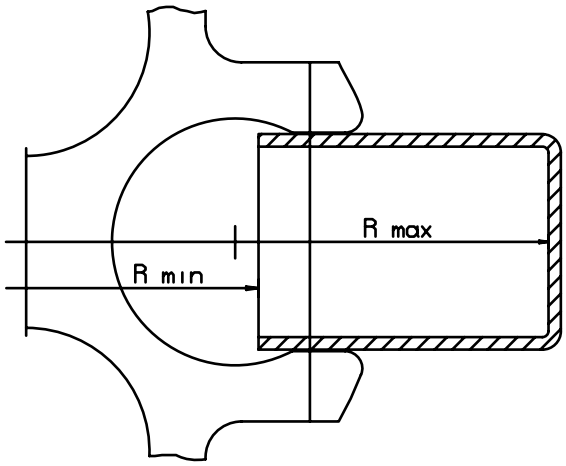

Fig. 10.2: Minimum and maximum radius of an angle rotor

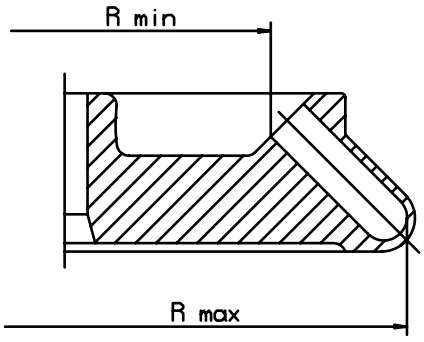

Fig. 10.3: Microhematocrite rotor

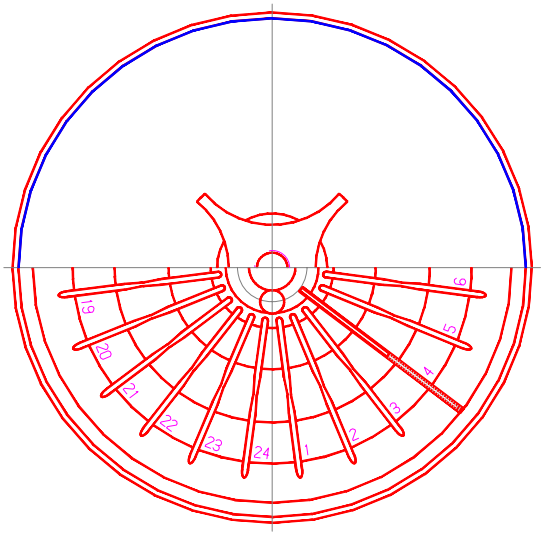

11 Appendix

11.1 Formulae – Mathematical Relations

11.1.1 Relative Centrifugal Force (RCF)

The parameters speed, RCF, and the group rotor and radius cannot be specified independently. They are interrelated via the following formula:

$$RCF = 11.18 \times 10^{-6} \times r \times n^2$$

If two values are given, the third value is determined by the equation. If then the speed or the rotation radius is changed, the resulting RCF will be recalculated. If the RCF is altered, the speed will be adapted accordingly under the consideration of the radius.

r = radius in cm
n = speed in rpm
RCF without dimension

11.1.2 Density

If the density of the liquid is higher than 1.2 g/cm^3, the maximum permissible speed of the centrifuge is calculated according to the following formula:

$$n = n_{max} \times \sqrt{(1.2 / Rho)}$$

Rho = density in g/cm^3

11.1.3 Speed-Gravitational-Field-Diagram

Additional help can be found in the enclosed speed-gravitational-field-diagram (page 63).

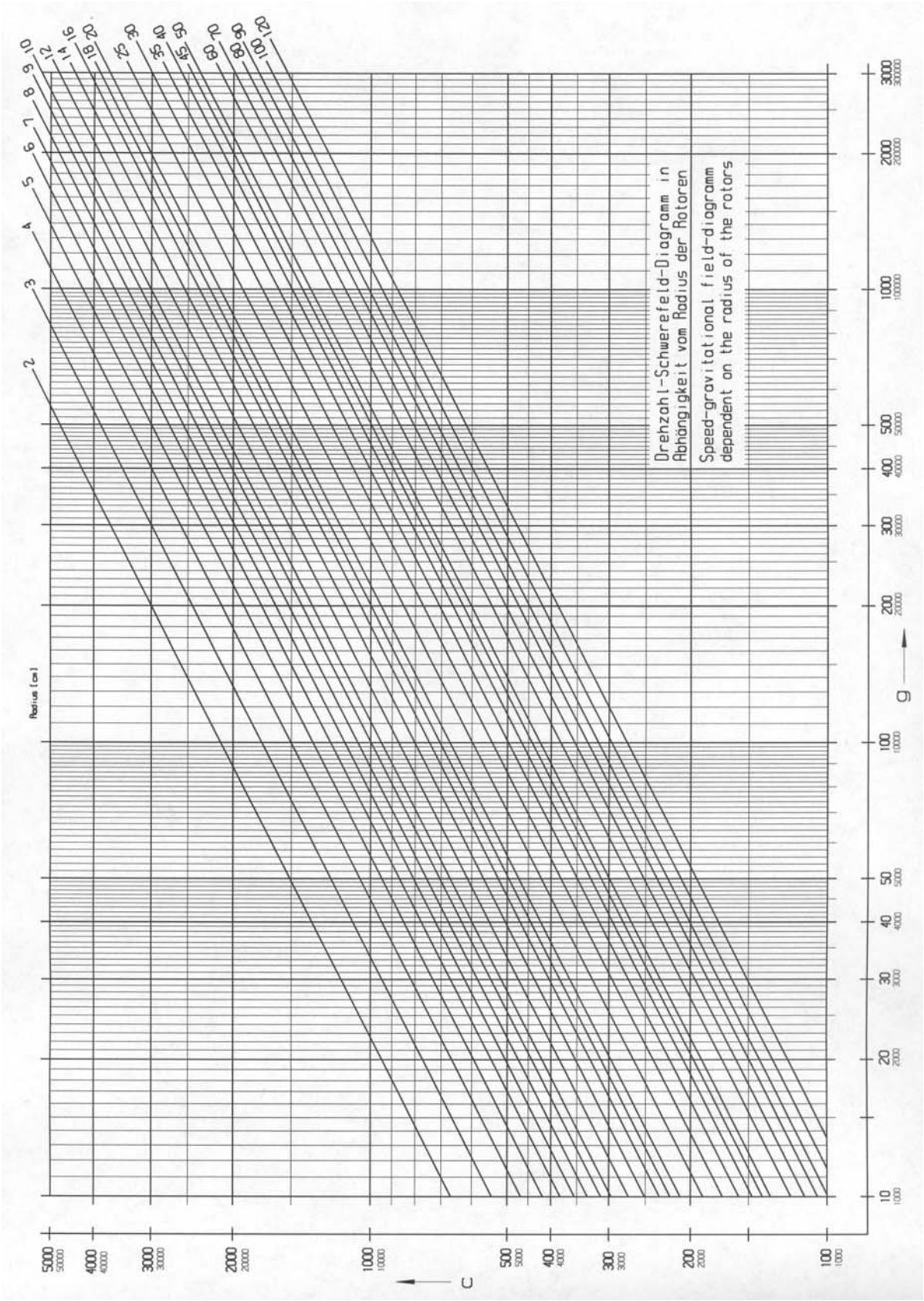

Fig. 11.1: Speed-gravitational-field-diagram

11.2 Declaration of Decontamination/Return Declaration

The Return Declaration (page 65) and the Declaration of Decontamination (page 67) serve for maintaining the safety and health of our employees.

Fill out the forms and attach them when returning centrifuges, accessories, and spare parts. Please understand that we cannot carry out any work before we have the declarations. **We recommend several copies of this page to be made.**

!!! Note – this form must be glued onto the outside of the box !!!

Return Declaration

	YES	NO
Decontamination declaration inside:	☐	☐
Unit / component contaminated:	☐	☐
Unit / component unused:	☐	☐

Thank you very much for a brief problem description.
This may reduce the repair costs.

Please make some copies before removing this page!

Fig. 11.2: Return Declaration

Declaration of Decontamination by the Operator

Concerning the contamination of centrifuges, accessories, and spare parts.

This declaration may only be filled out and signed by authorized staff.

Repair order no. _____ Date _____

Type of unit _____ Serial no. _____ Year _____
Type of unit _____ Serial no. _____ Year _____
Type of unit _____ Serial no. _____ Year _____
Type of unit _____ Serial no. _____ Year _____

Accessories _____

Are the components free from harmful substances? YES ☐ NO ☐

If not, which substances has the equipment come into contact with?

Names of the substances _____

Remarks: _____

(e.g. to handle with gloves only) _____

General characteristics of the substances

Caustic ☐ Toxic ☐ Corrosive ☐

Explosive ☐ Biologically hazardous ☐ Radioactive ☐

In Combination with which substances can hazardous mixtures develop?

Names of the substances _____

Have the components been cleaned before shipment! YES ☐ NO ☐

Is the equipment decontaminated and not harmful to human health? YES ☐ NO ☐

Prior to repair, radioactive contaminated components must be decontaminated according to the valid regulations for radiation protection!

Legally Binding Declaration

I / we hereby declare that the information on this declaration is correct and complete.

Company/Institute _____

Street _____

Postcode, City _____

Phone _____ Fax _____

Name _____

Date _____

Signature _____ Stamp _____

Please make some copies before removing this page!

Fig. 11.3: Declaration of Decontamination

11.3 Resistance Data

Resistant at +20 °C

- no data 1 resistant 2 practically resistant 3 partially resistant 4 not resistant		Concentration	High Density Polyethylene	Polyamide	Polycarbonate	Polyoxymethylene	Polypropylene	Polysulfone	Polyvinyl chloride, hard	Polyvinyl chlorid, weak	Polytetrafluorethylene	Aluminum
Medium	**Formula**	**[%]**	**HDPE**	**PA**	**PC**	**POM**	**PP**	**PSU**	**PVC**	**PVC**	**PTFE**	**AL**
Acetaldehyde	C_2H_4O	40	3	2	4	2	3	4	4	-	1	1
Acetamide	C_2H_5NO	saturated	1	1	4	1	1	4	4	-	1	1
Acetone	C_3H_6O	100	1	1	4	1	1	4	4	-	1	1
Acrylonitrile	C_3H_3N	100	1	1	4	3	3	4	4	4	1	1
Allyl alcohol	C_3H_6O	96	1	3	3	2	2	2	2	4	1	1
Aluminum chloride	$AlCl_3$	saturated	1	3	2	4	1	-	1	-	1	4
Aluminum sulfate	$Al_2(SO_4)_3$	10	1	1	1	3	1	1	1	1	1	1
Ammonium chloride	$(NH_4)Cl$	aqueous	1	1	1	2	1	1	1	1	1	3
Ammonium hydroxide	$NH_3 + H_2O$	30	1	3	4	1	1	2	1	-	1	1
Aniline	C_6H_7N	100	1	3	4	1	2	4	4	4	1	1
Anisole	C_7H_8O	100	3	4	4	1	4	4	2	-	1	1
Antimony trichloride	$SbCl_3$	90	1	4	1	4	1	-	1	-	1	4
Benzaldehyde	C_7H_6O	100	1	3	4	1	1	3	4	4	1	1
Benzene	C_6H_6	100	3	2	4	1	3	4	4	-	1	1
Boric acid	H_3BO_3	aqueous	1	3	1	2	1	-	-	-	1	1
Butyl acrylate	$C_7H_{12}O_2$	100	1	2	4	2	3	4	4	4	1	1
Butyl alcohol, normal	$C_4H_{10}O$	100	1	1	2	1	1	2	2	4	1	1
Calcium chloride	$CaCl_2$	alcoholic	1	4	2	3	1	-	-	4	1	3
Carbon disulfide	CS_2	100	4	3	4	2	4	4	4	4	1	1
Carbon tetrachloride (TETRA)	CCl_4	100	4	4	4	2	4	4	4	4	1	1
Chlorine	Cl_2	100	4	4	4	4	4	4	4	4	1	3
Chlorine water	$Cl_2 \times H_2O$		3	4	4	4	3	-	3	3	1	4
Chlorobenzene	C_6H_5Cl	100	3	4	4	1	3	4	4	4	1	1
Chloroform	$CHCl_3$	100	3	3	4	4	3	4	4	4	1	3
Chromic acid	CrO_3	10	1	4	2	4	1	4	1	-	1	1
Chromic potassium sulfate	$KCr(SO_4)_2 \times 12H_2O$	saturated	1	2	1	3	1	-	1	-	1	3
Citric acid	$C_6H_8O_7$	10	1	1	1	2	1	1	1	1	1	1
Citric acid	$C_6H_8O_7$	50	1	3	1	2	1	-	-	-	1	1
Copper sulfate	$CuSO_4 \times 5H_2O$	10	1	1	1	1	1	1	1	1	1	4
Cyclohexanol	$C_6H_{12}O$	100	1	1	3	1	1	1	1	4	1	1
Decane	$C_{10}H_{22}$	100	-	1	2	1	3	-	-	-	1	1
Diaminoethane	$C_2H_8N_2$	100	1	1	3	1	1	-	3	4	1	1
Diesel fuel	—	100	1	1	3	1	1	-	1	3	1	1
Dimethyl formamide (DMF)	C_3D_7NO	100	1	1	4	1	1	4	3	-	1	1
Dimethyl sulfoxide (DMSO)	C_2H_6SO	100	1	2	4	1	1	4	4	-	1	1
Dimethylaniline	$C_8H_{11}N$	100	-	3	4	2	4	-	-	-	1	1
Dioxane	$C_4H_8O_2$	100	2	1	4	1	3	2	3	4	1	1

Resistant at +20 °C

- no data
1 resistant
2 practically resistant
3 partially resistant
4 not resistant

Medium	Formula	Concentration [%]	High Density Polyethylene HDPE	Polyamide PA	Polycarbonate PC	Polyoxymethylene POM	Polypropylene PP	Polysulfone PSU	Polyvinyl chloride, hard PVC	Polyvinyl chlorid, weak PVC	Polytetrafluorethylene PTFE	Aluminum AL
Dipropylene glycol (mono)methyl ether	$C_4H_{10}O$	100	3	1	4	1	4	4	4	4	1	1
Ethyl acetate	$C_4H_8O_2$	100	1	1	4	1	1	4	4	4	1	1
Ethylene chloride	$C_2H_4Cl_2$	100	3	3	4	1	3	4	4	4	1	1
Ferrous chloride	$FeCl_2$	saturated	1	3	1	3	1	1	1	1	1	4
Formaldehyde solution	CH_2O	30	1	3	1	1	1	-	-	-	1	1
Formic acid	CH_2O_2	100	1	4	3	4	1	3	3	1	1	1
Furfural	$C_5H_4O_2$	100	1	3	3	2	4	-	-	-	1	1
Gasoline	C_5H_{12} - $C_{12}H_{26}$	100	2	1	3	1	3	3	2	-	1	1
Glycerol	$C_3H_8O_3$	100	1	1	3	1	1	1	1	2	1	1
Heptane, normal	C_7H_{16}	100	2	1	1	1	2	1	2	4	1	1
Hexane, n-	C_6H_{14}	100	2	1	2	1	2	1	2	4	1	1
Hydrogen chloride	HCl	5	1	4	1	4	1	1	1	-	1	4
Hydrogen chloride	HCl	concentrated	1	4	4	4	1	1	2	3	1	4
Hydrogen peroxide	H_2O_2	3	1	3	1	1	1	1	1	-	1	3
Hydrogen peroxide	H_2O_2	30	1	4	1	4	1	1	1	-	1	3
Hydrogen sulfide	H_2S	10	1	1	1	1	1	1	1	3	1	1
Iodine, tincture of	I_2		1	4	3	1	1	-	4	4	1	1
Isopropyl alcohol	C_3H_8O	100	1	1	1	1	1	1	1	4	1	2
Lactic acid	$C_3H_6O_3$	3	1	3	1	2	1	1	2	-	1	1
Magnesium chloride	$MgCl_2$	10	1	1	1	1	1	1	1	1	1	1
Mercuric chloride	$HgCl_2$	10	1	4	1	3	1	1	1	1	1	4
Mercury	Hg	100	1	1	1	1	1	1	1	3	1	3
Methyl acetate	$C_3H_6O_2$	100	1	1	4	2	1	-	4	4	1	1
Methyl alcohol	CH_4O	100	1	2	4	1	1	3	1	3	1	1
Methyl benzene	C_7H_8	100	3	1	4	1	3	4	4	4	1	1
Methyl ethyl ketone (MEK)	C_4H_8O	100	1	1	4	1	1	4	4	4	1	1
Methylene chloride	CH_2Cl_2	100	4	3	4	3	3	4	4	4	1	1
Mineral oil	—	100	1	1	1	1	1	1	1	-	1	1
Nitric acid	HNO_3	10	1	4	1	4	1	1	1	-	1	3
Nitric acid	HNO_3	100	4	4	4	4	4	-	4	-	1	1
Nitrobenzene	$C_6H_5NO_2$	100	3	4	4	3	2	4	4	4	1	1
Oleic acid	$C_{18}H_{34}O_2$	100	1	1	1	2	1	-	1	-	1	1
Oxalic acid	$C_2H_2O_4$ x $2H_2O$	100	1	3	1	4	1	1	1	1	1	1
Ozone	O_3	100	3	4	1	4	3	1	1	-	1	2
Petroleum	—	100	1	1	3	1	1	1	1	3	1	1
Phenol	C_6H_6O	10	1	4	4	4	1	4	1	3	1	1
Phenol	C_6H_6O	100	2	4	4	4	1	3	4	3	1	1
Phosphoric acid	H_3PO_4	20	1	4	2	4	1	-	-	-	1	4
Phosphorus pentachloride	PCl_5	100	-	4	4	4	1	-	4	4	1	1
Potassium hydrogen carbonate	$CHKO_3$	saturated	1	1	2	1	1	-	-	-	1	4
Potassium hydroxide	KOH	30	1	1	4	3	1	1	1	1	1	4
Potassium hydroxide	KOH	50	1	1	4	3	1	1	1	1	1	4

Resistant at +20 °C

- no data 1 resistant 2 practically resistant 3 partially resistant 4 not resistant		Concentration	High Density Polyethylene	Polyamide	Polycarbonate	Polyoxymethylene	Polypropylene	Polysulfone	Polyvinyl chloride, hard	Polyvinyl chlorid, weak	Polytetrafluorethylene	Aluminum
Medium	**Formula**	**[%]**	**HDPE**	**PA**	**PC**	**POM**	**PP**	**PSU**	**PVC**	**PVC**	**PTFE**	**AL**
Potassium nitrate	KNO_3	10	1	1	1	1	1	-	-	-	1	1
Potassium permanganate	$KMnO_4$	100	1	4	1	1	1	-	1	-	1	1
Pyridine	C_5H_5N	100	1	1	4	1	3	4	4	4	1	1
Resorcinol	$C_6H_6O_2$	5	1	4	2	3	1	4	2	-	1	2
Silver nitrate	$AgNO_3$	100	1	1	1	1	1	1	1	1	1	4
Sodium bisulfite	$NaHSO_3$	10	1	1	2	4	1	-	-	-	1	1
Sodium carbonate	Na_2CO_3	10	1	1	1	1	1	-	-	-	1	3
Sodium chloride	NaCl	30	1	1	1	1	1	1	1	1	1	3
Sodium hydroxide	NaOH	30	1	1	4	1	1	1	1	1	1	4
Sodium hydroxide	NaOH	50	1	1	4	1	1	1	1	-	1	4
Sodium sulfate	Na_2SO_4	10	1	1	1	1	1	1	1	1	1	1
Spirits	C_2H_6O	96	1	1	1	1	1	1	1	3	1	1
Styrene	C_8H_8	100	4	1	4	1	3	-	4	4	1	1
Sulfuric acid	H_2SO_4	6	1	4	1	4	1	1	1	-	1	3
Sulfuric acid	H_2SO_4	fuming	4	4	4	4	4	4	4	4	1	3
Tallow	—	100	1	1	1	1	1	-	1	1	1	1
Tetrahydrofuran (THF)	C_4H_8O	100	3	1	4	1	3	4	4	4	1	1
Tetrahydronaphthalene	$C_{10}H_{12}$	100	3	1	4	1	4	4	4	4	1	1
Thionyl chloride	Cl_2SO	100	4	4	4	2	4	4	4	4	1	3
Transformer oil	—	100	1	1	3	3	1	1	1	-	1	1
Trichloroethane	$C_2H_3Cl_3$	100	3	3	4	2	4	4	4	4	1	4
Urea	CH_4N_2O	10	1	1	1	1	1	-	-	-	1	1
Urine	—	100	1	1	1	1	1	-	1	1	1	2
Vinegar	$C_2H_4O_2$	10	1	4	1	1	1	1	1	1	1	1
Vinegar	$C_2H_4O_2$	90	1	4	4	4	1	3	1	4	1	1
Wax	—	100	-	1	1		1	-	-	-	1	1
Wines	—	100	1	1	1	2	1	1	1	1	1	4
Xylene	C_8H_{10}	100	3	1	4	1	4	4	4	4	1	1
Zinc chloride	$SnCl_2$	10	1	4	2	2	1	-	-	-	1	4

Fig. 11.4: Resistance data

12 Index

Acceleration and deceleration curves
see also the softstart and softstop functions.....*27*
Acceleration time
- see also the softstart and softstop function.....*35*
Acid.....69, 70, 71
Adapter.....52, 60
Alkaline solutions.....19, 47, 48
Ambient temperature.....13
Angle rotor.....33, 34, 52
Auto-Lid-Open function.....43
Automatic rotor identification.....40
Bucket.....18, 20, 34, 48, 49, 50, 52
Capillary tubes
- tubes with a very small cross-section.....*32*
Carrier.....34, 50, 52
Centrifugation with different tube sizes.....33
Centrifugation with low Capacity.....33
Centrifuges
- definition.....*11*
Chemical reactions.....49
Cleaning agents.....47, 48
Condensation.....24
Connected load.....13
Connecting cable.....15
Contamination
- contamination with harmful substances.....*20, 47, 48*
Continuous heat resistance.....51
Continuous run.....37
Corrosion
- chemical changes of the material surface.....*18, 20, 21, 34, 47, 48, 49, 50*
Cracks.....21, 34, 49
Current consumption.....13
Damage of the surface.....49
Dangerous goods.....19
Deceleration time
- see also the softstart and softstop function.....*35*
Density.....18, 62, 69
Disinfectants.....51
Electrical connection.....13
EMC as per EN 61326.....13
Emergency circuit breaker.....24
Equipotential bonding screw.....28
Error messages.....28, 44
Errors.....28, 46
Fire-fighting measures.....21
Fuse.....24, 44
General Conditions.....53
Glass particles.....50
Gravitational field.....13, 32, 49, 62
Grease for load-bearing bolts.....15, 47, 49

Ground wire check 28
Ground wire connector 24
Hazard warnings 16, 19, 30, 31, 53
Hazards 11, 20, 21
Humidity 13
Imbalance 18, 19, 28, 33, 34, 46, 50
Increment
- amount by which a quantity is increased 37, 38
Infectious substances
- material including infectious pathogenes 18, 20, 51
Inflammable substances 20
IP-Code 13
Load-bearing bolts 50
Mains plug 16
Mains power switch 29, 42, 44, 45
Malfunction 18, 24, 44, 46
Maximum speed for tubes 60
Measures for the containment of harmful emissions 21
Microhematocrite rotor 32
Motor shaft 21, 23, 30, 31, 32, 47
Multiple carrier 34, 49
Noise level 13
Nominal voltage 13
Operating voltage 24
Operational safety 20, 48
Overseas shipping 22
Padlock symbol 42
Parameter
- value characterizing the performance 13, 27, 32, 38, 39, 42, 46, 62
Pathogenic substances
- material including pathogenes 20, 47, 48, 51
Performance data 13
Pivot bearing 50
Power consumption 13
Power cord 24, 44, 45, 47
Pressure marks 49
Prevention of accidents 11, 17
Program 41
Program number 41
Protection class 13
Radioactive substances
- material emitting harmful radiation 18, 20, 47, 48
Radius 61, 62
Relative centrifugal force 27, 39, 62
Rotor geometry 39
Rotor number 40
Rotor tie-down screw 30, 31, 32, 49
Rotor wrench 15, 30, 31, 32
Rotors for microtiter plate formats 30
Rubber cushions 48, 49, 50, 52
Safety class 24
Safety distance 19, 24
Safety instructions 11, 16, 18

Safety instructions and hazard warnings....30, 31
Schutzleiteranschluss....16
Serial number....13
Short run....37
Slushing oil....15, 48, 49
Solvents....19, 47, 48
Sound signal....28, 43, 44
Spare parts....46, 64
Storage temperature....13, 22
Stress-corrosion....49
Supply voltage....24
Swing-out rotor....33
Toxic substances....18, 20, 47, 48
Transport safety device....22, 23
Trunnion pins....21
UV radiation....24, 47
Ventilation....24, 46

Fisher Scientific
Part of Thermo Fisher Scientific

Belgique / België	tél 056 260 260	fax 056 260 270	be.fisher@thermofisher.com	www.be.fishersci.com
España	tfno 91 515 92 34	fax 91 515 92 35	es.fisher@thermofisher.com	www.es.fishersci.com
France	tél 03 88 67 53 20	fax 03 88 67 11 68	fr.commande@thermofisher.com	www.fr.fishersci.com
Italia	tel 02 953 28 258	fax 02 953 27 374	it.fisher@thermofisher.com	www.it.fishersci.com
Netherlands	tel 020 487 70 00	fax 020 487 70 70	nl.info@thermofisher.com	www.fishersci.nl
Portugal	tel 21 425 33 50	fax 21 425 33 51	pt.fisher@thermofisher.com	www.pt.fishersci.com
Suisse / Switzerland	tél 056 618 41 11	fax 056 618 41 41	info.ch@thermofisher.com	www.ch.fishersci.com