thermoscientific

Thermo Scientific
Sorvall BP 8 / 16
Heavy Duty Water Cooled Centrifuge

Instruction Manual

50152621-i • 2023-11

Visit us online to register your warranty:
thermofisher.com/labwarranty

ThermoFisher
SCIENTIFIC

Table of Contents

Preface vii

Items Supplied vii

Intended Use for Sorvall BP 8 / 16 Heavy Duty Water Cooled viii

Medical viii

In Vitro Diagnostics viii

Limitations viii

Signal Words and Colors ix

Precautions ix

Symbols used on the Centrifuge and its Components xii

Symbols used in the Manual xiv

Transport and Set Up I–1

1. Location I–1

2. Transporting I–3

3. Storage I–3

4. Shipping I–3

Thermo Scientific Centri-Touch User Interface II–1

Status II–2

Run Parameters II–3

Control and Configuration II–3

Lighthouse Mode II–4

Operation III–1

1. Switch on the Centrifuge III–1

2. Open the Centrifuge Door III–1

3. Install a Rotor III–1

3. 1. Before Installation III–2

3. 2. Selection of Rotor, Buckets and Adapters III–3

3. 3. Rotor Installation III–3

3. 4. Loading Blood Bags III–6

4. Maximum Loading III–10

Use of Tubes and Consumables III–11

5. Close the Centrifuge Door III–11

6. Entering Parameters III–11

6. 1. Acceleration / Deceleration Profiles III–11
6. 2. Preselect Speed / RCF-Value III–11
6. 3. Runtime Preselection III–12
6. 4. Preselect Temperature III–12
6. 5. Pre-warm or Pre-cool the Centrifuge III–12

7. Programs III–13

8. Centrifugation III–14

8. 1. Start III–14
8. 2. Stop III–14

9. Remove a Rotor III–15

10. Switch off the Centrifuge III–16

Maintenance and Care IV–1

1. Cleaning Intervals IV–1

2. Basics IV–1

2. 1. Rotor and Components Inspection IV–2

3. Cleaning IV–3

3. 1. Touchscreen IV–4

4. Disinfection IV–5

5. Decontamination IV–5

6. Autoclaving IV–6

7. Maintenance IV–7

7. 1. Preventive Maintenance IV–7
7. 2. Service IV–7

8. Shipping and Disposal IV–8

Troubleshooting V-1

1. Mechanical Emergency Door Release V-1

2. Ice Formation V-2

3. Troubleshooting by Guide V-3

4. Information for the Customer Service V-4

Technical Specifications A–1

1. Directives, Standards and Guidelines A–2

2. Refrigerants A–3

3. Mains Supply A–3

4. Water Supply A–4

5. Components A–5

Sorvall BP 8 / 16 Heavy Duty Water Cooled A–5

Rotors B–1

Items Supplied for Rotors B–1

HAEMAFlex 6 Rotor B–2

HAEMAFlex 6 Rotor B–3

HAEMAFlex 6 Rotor B–4

HAEMAFlex 8 Rotor B–5

HAEMAFlex 8 Rotor B–6

HAEMAFlex 8 Rotor B–7

HAEMAFlex 12 Rotor B–8

HAEMAFlex 12 Rotor B–9

HAEMAFlex 16 Rotor B–10

HAEMAFlex 16 Rotor B–11

Chemical Compatibility Chart C–1

Table of Figures

Figure I–1: Centrifuge clearance, example with barcode scanner I–2
Figure III–1: Overview centrifuge and rotor, e.g. HAEMAFlex 12 ..... III–2
Figure III–2: Align windshield knob and drive shaft III–3
Figure III–3: Identify the circular marking, e.g. HAEMAFlex 8 and 12 ..... III–4
Figure III–4: Rotor locking tool. III–4
Figure III–5: Put the rotor locking tool. III–4
Figure III–6: Tighten the rotor to the drive shaft. III–5
Figure III–7: Lubricate trunnion pins, e.g. HAEMAFlex 12 ..... III–5
Figure III–8: Install buckets into rotor, e.g. HAEMAFlex 12 ..... III–6
Figure III–9: Correctly assembled round bucket (75003836/75003936, not 75003964) III–6
Figure III–10: Incorrect loading of tubing not properly secured III–7
Figure III–11: Incorrect loading of bags without compensation III–7
Figure III–12: Correct loading III–8
Figure III–13: Incorrect loading of only one cavity loaded and correct loading of full adapters ... III–8
Figure III–14: Correct Loading III–9
Figure III–15: Incorrect Loading III–9
Figure III–16: Insert windshield lid into holder III–10
Figure III–17: Select program III–13
Figure III–18: Remove the rotor from the drive shaft. III–15
Figure IV–1: Cleaning rotor bolts and bucket bearing surfaces IV–4
Figure V–1: Marking on windshield lid V-1
Figure V–2: Position of the mechanical emergency door release V-2
Figure V–3: Example for an error message V-3

Table of Tables

Table Preface–1: Items Supplied vii
Table Preface–2: Signal Words and Colors ix
Table Preface–3: Symbols used on the Centrifuge and its Components xiv
Table Preface–4: Symbols used in the manual xv
Table V–1: Error messages V-3
Table A–1: Technical Data Sorvall BP 8 / 16 Heavy Duty Water Cooled A–1
Table A–2: Directives, Standards and Guidelines Sorvall BP 8 / 16 Heavy Duty Water Cooled A–2
Table A–3: Refrigerants used in the Sorvall BP 8 / 16 Heavy Duty Water Cooled A–3
Table A–4: Mains Supply A–3
Table A–5: Water Supply A–4
Table A–6: Components for Sorvall BP 8 / 16 Heavy Duty Water Cooled A–6
Table B–1: Items supplied for rotors B–1
Table B–2: HAEMAFlex 6 Rotor with Single Blood Bag Buckets (oval) B–2
Table B–3: HAEMAFlex 6 Rotor with Single Blood Bag Buckets (round) B–3
Table B–4: HAEMAFlex 6 Rotor with Single Blood Bag Buckets with Filter Pack B–4
Table B–5: HAEMAFlex 8 Rotor with Single Blood Bag Buckets (oval) B–5
Table B–6: HAEMAFlex 8 Rotor with Single Blood Bag Buckets (round) B–6
Table B–7: HAEMAFlex 8 Rotor with Single Blood Bag Buckets with Filter Pack B–7
Table B–8: HAEMAFlex 12 Rotor with Double Blood Bag Buckets B–8
Table B–9: HAEMAFlex 12 Rotor with Oval Buckets B–9
Table B–10: HAEMAFlex 16 Rotor with Double Blood Bag Buckets B–10
Table B–11: HAEMAFlex 16 Rotor with Oval Buckets B–11
Table C–1: Chemical Compatibility C–10

Preface

Before starting to use the centrifuge, read through this instruction manual carefully and follow the instructions.

Failure to follow the instructions and safety information in this instruction manual will result in the expiration of the sellers warranty.

Items Supplied

The centrifuges are supplied without a rotor. The items supplied with a rotor are listed: [→ 🗎 B–1]

Article No.	Item	Quantity
	Centrifuge	**1**
75007662	Thermo Scientific Sorvall BP 8 Heavy Duty Water Cooled, 200, 208, 220, 230, 240 V ±10 %, 50 / 60 Hz, Single phase	
75007661	Thermo Scientific Sorvall BP 16 Heavy Duty Water Cooled, 200, 208, 220, 230, 240 V ±10 %, 50 / 60 Hz, Single phase	
50147062	**Bottom Seal**	**1**
50152646	**Bottom Seal Connectors**	**2**
50153114	**Water Supply Kit**	**1**
50152824	**Cable Holder**	**1**
50150042	**Design Plugs**	**2**
20510368	**Screws**	**2**
50153065	**Cover Plate for Back Panel**	**1**
50152178	**Cover for Back Panel Connections**	**1**
50153427	**Cover Frame for Back Panel Connections**	**1**
20310411	**Plugs**	**7**
20480317	**Washers**	**7**
20280119	**Bubble Level**	**1**
	Instruction Manual	**1**
	CD	**1**

Table Preface–1: Items Supplied

If any parts are missing, please contact the nearest Thermo Fisher Scientific representative.

Intended Use for Sorvall BP 8 / 16 Heavy Duty Water Cooled

Medical

This centrifuge is intended for separation of blood into blood components using blood bags. The blood components are intended to be used for human blood transfusion.

Clinical facilities and institutions are responsible for the process of human blood transfusion.

This intended use is limited to the associated rotors and components.

In Vitro Diagnostics

This centrifuge system is intended for separation of blood into cell-free supernatant (plasma, serum) and cell-containing sediment.

Plasma and serum are intended to be used in In-Vitro Diagnostic (IVD) applications (assays).

Blood is used in numerous diagnostic tests such as hematological screening (e.g. measurement of free hemoglobulin), immunological screening (e.g. measurement of thrombocytes levels) and cardiovascular system assessment.

Intended User

The centrifuge must be operated by trained personal only.

Trained personnel can be a clinical laboratory technologist, a medical laboratory technician or personal with similar education.

Associated Rotors and Components

The Thermo Scientific™ Sorvall™ BP 8 Heavy Duty Water Cooled centrifuge can be operated with the Thermo Scientific™ HAEMAFlex™ 6 and HAEMAFlex 8 rotor. The Thermo Scientific Sorvall BP 16 Heavy Duty Water Cooled centrifuge can be operated with the Thermo Scientific HAEMAFlex 12 and HAEMAFlex 16 rotor. For more details on buckets and further components: [→ 🗎 A–5] [→ 🗎 B–1]

Limitations

The use of the centrifuge is limited to its technical specifications and to the components indicated by Thermo Fisher Scientific. [→ 🗎 A–1] [→ 🗎 A–5]

The centrifuge and its components, such as rotors and buckets may only be operated within their cycle limitation and following the preventive maintenance rules. [→ 🗎 IV–7]

The user is responsible to ensure that specimen containers (e.g. blood tubes) or blood bags used are suitable for the chosen centrifugation process. In doubt contact the manufacturer of the specimen container or blood bags.

Specimen containers or blood bags need to be fitted into an adapter. The user is responsible to select an appropriate adapter. [→ 🗎 III–3]

The institution using the centrifuge is responsible for testing the resulting blood components and their consecutive use.

Signal Words and Colors

Signal Word and Color	Degree of Hazard
WARNING	Indicates a hazardous situation that, if not avoided, could result in death or serious injury.
CAUTION	Indicates a hazardous situation that, if not avoided, could result in minor or moderate injury.
NOTICE	Indicates information considered important, but not hazard-related.

Table Preface–2: Signal Words and Colors

Precautions

WARNING

Observe the safety instructions. Not following these instructions can cause damage like harm by mechanical impact, electrical shock, infection and loss of sample.

The centrifuge is to be used for its intended use only. Improper use can cause damages, contamination, and injuries with fatal consequences.

The centrifuge must be operated by trained personnel only.

It is the obligation of the operator to make sure, that the proper protective clothing is used. Mind the “Laboratory Biosafety Manual” of the World Health Organization (WHO) and the regulations in your country.

As safety zone maintain a clear radius of at least 30 cm around the centrifuge. Do not place any dangerous substances within this safety zone.

Set up in a well-ventilated environment, on a horizontally leveled and rigid surface with adequate load-bearing capacity.

Do not modify the centrifuge and its accessories in any unauthorized way.

The centrifuge housing is not to be opened by the operator.

Thermo Fisher Scientific is not responsible for the process of human blood transfusion.

To ensure safe operation of this centrifuge regarding blood and blood components you have to follow the regulations in your country.

WARNING

Risk of damage due to incorrect power supply.

Make sure that the centrifuge is plugged only into a power outlet that has been properly grounded.

WARNING

Risk from handling hazardous substances.

Especially when working with corrosive samples (salt solutions, acids, bases), the components and the centrifuge chamber have to be cleaned thoroughly.

Do not centrifuge explosive or flammable materials or substances.

The centrifuge is neither inert nor protected against explosion. Never use the centrifuge in an explosion-prone environment.

Do not centrifuge toxic or radioactive materials or any pathogenic micro-organisms without suitable safety precautions.

If centrifuging any hazardous materials mind the “Laboratory Biosafety Manual” of the World Health Organization (WHO) and any local regulations. When centrifuging microbiological samples from the Risk Group II (according to the “Laboratory Biosafety Manual” of the World Health Organization (WHO)), aerosol-tight biological seals have to be used. Look on the internet page of the World Health Organization (www.who.int) for the “Laboratory Biosafety Manual”. For materials in a higher risk group, extra safety measures have to be taken.

If toxins or pathogenic substances have contaminated the centrifuge or its parts, appropriate disinfection measures have to be taken. [→ 🗎 IV–5]

Extreme care should be taken with highly corrosive substances which can cause damage and impair the mechanical stability of the rotor. These should only be centrifuged in fully sealed tubes.

If a hazardous situation occurs, turn off the power supply to the centrifuge and leave the area immediately.

WARNING

Serious injuries can occur, if you touch a spinning rotor with your hands or tools.

Never open the centrifuge door until the rotor has come to a complete stop and this has been confirmed on the touchscreen.

The emergency door release may be used in emergencies only to recover the samples from the centrifuge, e.g. during a power failure. [→ 🗎 V-1]

Do not open the centrifuge, while it is running.

In any case of severe mechanical failure, such as rotor or bucket crash, the centrifuge is not aerosol-tight.

In case of rotor failure the centrifuge can be damaged. Leave the room. Inform customer service.

WARNING

Safety can be impaired by wrong loading and worn accessories.

Use only a properly installed rotor. [→ 🗎 III–1]

Do not use rotors, buckets or components which show any signs of removed protective coating, corrosion or cracks. Contact customer service for further advice or inspections.

Use only with rotors which have been loaded properly.

Never overload the rotor.

Always balance the samples.

Use only rotors and components for this centrifuge which have been approved by Thermo Fisher Scientific. Exceptions to this rule are commercially available glass or plastic centrifuge lab ware, provided they have been designed to fit the rotor or the adapter cavities and are approved for the speed or the RCF value of the rotor.

Make sure the rotor is locked properly into place before operating the centrifuge.

WARNING

Physical harm caused by ignoring operative basics.

Never use the centrifuge if parts of its casing is damaged or missing.

Never start the centrifuge when the centrifuge door is open.

Do not move the centrifuge while it is running.

Do not lean on the centrifuge.

Do not place anything on top of the centrifuge during a run.

Implement measures which ensure that no one can approach the centrifuge for longer than absolutely necessary while it is running.

WARNING

The magnets built into the rotors can have a negative effect on active implants, such as cardiac pacemakers.

The magnets are mounted on the bottom of the rotor.

Always keep a distance of 20 cm between the rotor and the active implant, as the product generates permanent magnetic fields. The magnetic field strength at a distance of 20 cm is less than 0.1 mT, so there should be no interference.

CAUTION

Due to air friction the temperature of rotor may rise significantly while the centrifuge is spinning.

Refrigerated units have limitations in cooling capabilities.

Displayed and set temperature can deviate from sample temperature. Sample temperature might exceed critical temperature of your application.

NOTICE

To shut down the centrifuge:

Press the STOP key to shut down the centrifuge.

Turn off the centrifuge at the power supply switch. The power supply plug must be freely accessible at all times.

Pull out the power supply plug or disconnect the power supply in an emergency.

NOTICE

In case of serious incident:

Report any case of serious incident that has occured in relation to the device to the manufacturer and your local authorities

Symbols used on the Centrifuge and its Components

This symbol refers to general hazards. Observe the information contained in the instruction manual to keep yourself and your environment safe.

CAUTION means that material damage could occur.

WARNING means that injuries or material damage or contamination could occur.

This symbol refers to biological hazards.

Observe the information contained in the instruction manual to keep yourself and your environment safe.

This symbol refers to hazards from sharp items.

Observe the information contained in the instruction manual to keep yourself and your environment safe.

This symbol refers to hazards from closing mechanical parts.

Observe the information contained in the instruction manual to keep yourself and your environment safe.

This symbol refers to information on hazards, described within the manual.

Observe the information contained in the instruction manual to keep yourself and your environment safe.

This symbol on rotors and components refers to information on hazards, described within the manual.

Observe the information contained in the instruction manual to keep yourself and your environment safe.

This symbol demands to disconnect mains before transporting or servicing the centrifuge.

This symbol shows the direction of rotation.

Indicates that the device is not sterile.

Indicates the device manufacturer.

Indicates the date when the device was manufactured.

	Indicates the date after which the device is not to be used.
LOT	Indicates the manufacturer's batch code so that the batch or lot can be identified.
REF	Indicates the manufacturer's catalogue number so that the device can be identified.
SN	Indicates the manufacturer's serial number so that a specific device can be identified.
	Indicates a device that is intended for one single use only.
	Indicates the need for the user to consult the instructions for use.
IVD	Indicates a device that is intended to be used as an in vitro diagnostic medical device.
MD	Indicates a device as a medical device.
	The symbol indicating separate collection for EEE consists of the crossed-out wheeled bin.
CE	Indicates CE conformity.
CE 0123	Indicates CE conformity controlled by a notified body.
25	Indicates conformity to Chinese environmental law.

c UL US LISTED	Indicates conformity with Underwriter Laboratories (UL) requirements.
max. 1850 g	Indicates the maximum possible weight of the adapter fully loaded.
max. 5400 x g rcf	Indicates the maximum rcf value for centrifugation.
40 °C	Indicates the upper limit of temperature to which the product can be safely exposed to.
121 °C	Sterilizable in a steam sterilizer (autoclave) at the temperature specified.
121 °C	Not sterilizable in a steam sterilizer (autoclave).
Eingang input entree / Wasser water eau / Ausgang output sortie / 30V/1A max.	This symbol marks the inlet and outlet for the cooling liquid and the connection to the floating contact (NO/NC).
0-15 cm	Make sure that the power supply cable is set up correctly. Electrical Hazard can occur if the power supply cable is not set up correctly. Hang the power supply cable in loops on the cable holder at the backside of the centrifuge. The flag attached to the power supply cable is marking the end of the necessary part of the power supply cable that needs to hang in loops on the cable holder.

Table Preface–3: Symbols used on the Centrifuge and its Components

Symbols used in the Manual

	This symbol refers to general hazards. Observe the information contained in the instruction manual to keep yourself and your environment safe. ***CAUTION*** means that material damage could occur. ***WARNING*** means that injuries or material damage or contamination could occur.

	This symbol refers to biological hazards. Observe the information contained in the instruction manual to keep yourself and your environment safe.
[→ 🗎 B–1]	This is a cross reference. The arrow stands for “refer to” or “see”. The symbol in the middle stands for “page”. The page number is stated at the end. In this example it is B–1. The first sign stands for the chapter, the second sign for the page within this chapter. Page numbers are placed at each bottom of a page.

Table Preface–4: Symbols used in the manual

Transport and Set Up

CAUTION Make sure that the centrifuge and the packaging is not damaged. Speak to the shipping company and Thermo Fisher Scientific immediately if damage is found.

NOTICE Installation including relocation of the unit must be done by a Thermo Fisher Scientific authorized service technician.

1. Location

WARNING Risk of impact by moving centrifuge.
The centrifuge can crush into objects and persons in a radius of 30 cm when spinning.
Keep a safety zone of 30 cm around the centrifuge for safe operation.
Make sure that no one is in the safety zone while the centrifuge spins.

WARNING Use only the supplied water hoses and bottom seal connectors. Do not fixate the water hoses. Do not fixate the power supply cable.
The safety zone can be violated and electrical hazard can occur if using other water hoses and bottom seal connectors than the ones supplied.

WARNING Make sure that the position of the opening in the floor and the centrifuge bottom for the water and power supply installation are in an acceptable position to each other.
The safety zone can be violated and electrical hazard can occur if the position of the opening in the floor and the centrifuge bottom for the water and power supply installation are not in an acceptable position to each other. The installation requirements for the position of the openings can be found within the architectural drawing (50152582). Contact a Thermo Fisher Scientific authorized service technician if needed.

CAUTION UV rays decrease the stability of plastics.
Do not expose the centrifuge, rotors and plastic components to direct sunlight.

Operate the centrifuge only inside a room.

The set-up location must fulfill these requirements:

THE ACTIVITIES DESCRIBED IN THIS CHAPTER ARE FOR SERVICE TECHNICIANS.

- Keep a safety zone of minimum 30 cm (Figure I–1 on page I–2, green area) around the centrifuge.

  Persons and hazardous substances must be kept out of this safety zone while centrifuging.
- The supporting structure must:
  - » be stable and free of resonance,
  - » be applicable for horizontal setup of the centrifuge,
  - » hold the weight of the centrifuge.
- Do not expose the centrifuge to heat and strong sunlight.
- The set-up location must be well-ventilated at all times.

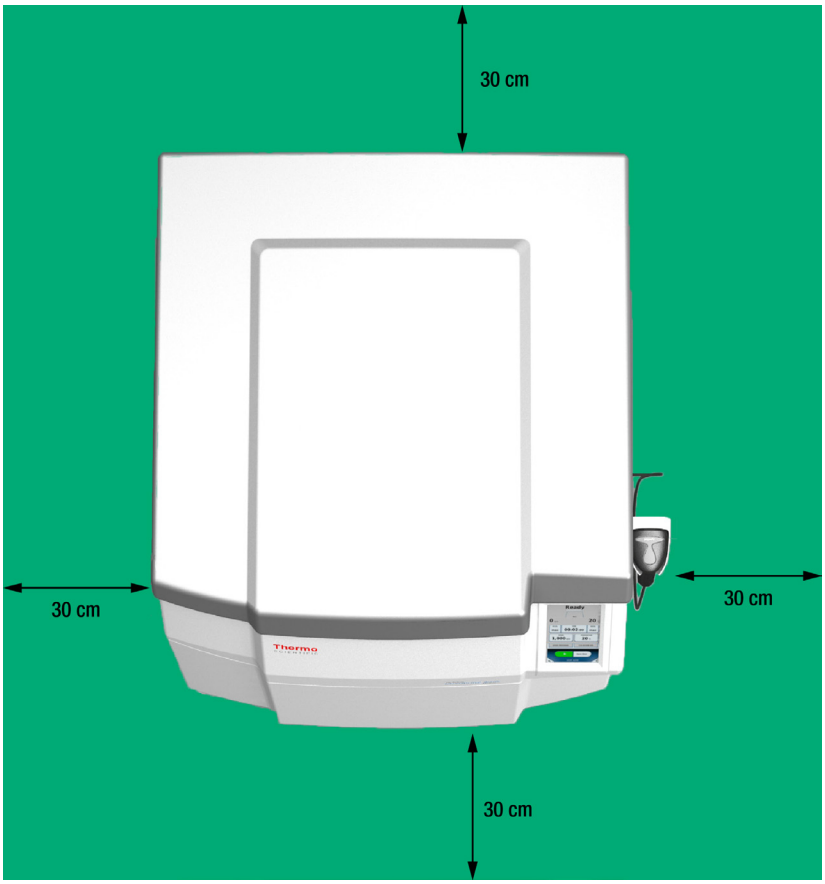

Figure I–1: Centrifuge clearance, example with barcode scanner

THE ACTIVITIES DESCRIBED IN THIS CHAPTER ARE FOR SERVICE TECHNICIANS.

THE ACTIVITIES DESCRIBED IN THIS CHAPTER ARE FOR SERVICE TECHNICIANS.

2. Transporting

WARNING

Never stand before a moving centrifuge to stop it.

If the centrifuge is moved on an uneven surface, it can get faster due to its own weight.

An impact of the centrifuge can lead to serious injuries.

CAUTION

Always remove the rotor before you transport the centrifuge.

If you do not remove the rotor you can damage the centrifuge drive or drive shaft.

NOTICE

Dispose the centrifuge packaging.

NOTICE

Assign a shipping company for the transport.

Inform the customer service about the transport.

- Impact can damage the centrifuge.
- Send the centrifuge upright and if possible in packaging.

3. Storage

WARNING

When you remove the centrifuge and components from use, clean and if necessary disinfect or decontaminate the full system. If you are not sure speak to the Thermo Fisher Scientific customer service.

- Before storing the centrifuge and the components it must be clean and if necessary disinfected and decontaminated.

  Centrifuge, rotors, buckets and components have to be fully dry before storage.
- Keep the centrifuge in a clean, dust-free location.
- Keep the centrifuge on its rubber feet and not on its casters.
- Do not store the centrifuge in direct sunlight.

4. Shipping

WARNING

Before shipping the centrifuge and components you must clean and if necessary disinfect or decontaminate the full system. If you are not sure speak to the Thermo Fisher Scientific customer service.

Before shipping the centrifuge:

- The centrifuge must be clean and decontaminated.
- You must confirm the decontamination with a decontamination certificate.

Thermo Scientific Centri-Touch User Interface

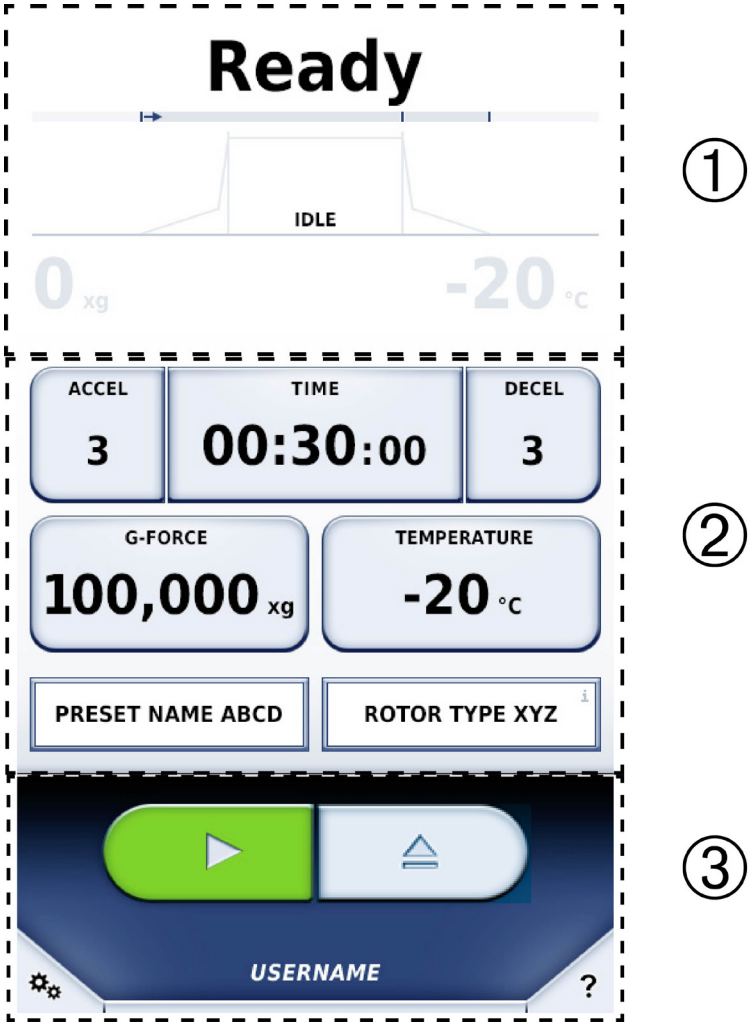

①	Actual status information
②	Set values
③	Settings and navigation

Status

The upper part of the touchscreen displays the centrifuge status.

The remaining time is indicated while centrifugation is in progress. The progress bar shows the actual phase of the centrifugation.

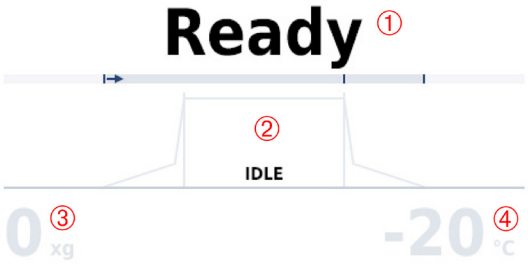

①	**Status**: In the Time mode, the remaining time for the centrifugation process is shown here. In the Hold mode, the elapsed time is displayed.
②	**Progress**: The curve diagram is divided into the sections acceleration, centrifugation and deceleration.
③	**Speed**: The current speed of the rotor is shown here.
④	**Temperature**: The temperature in the centrifugation chamber is shown here.

Status that can be displayed

Ready	Centrifugation can be started.
Door open	Centrifuge door is open.
Door moving	Door is automatically closing or opening.
Error	An error has occurred.
Canceled	Centrifugation has been stopped manually.
Complete	Centrifugation has been successfully completed.
Pretempering completed	Pretempering has been successfully completed.
No rotor	No rotor is identified in the centrifuge.

Run Parameters

The set points for centrifugation can be set in the parameterization window. Clicking one of these buttons will open a new window in which you can input the appropriate set point value.

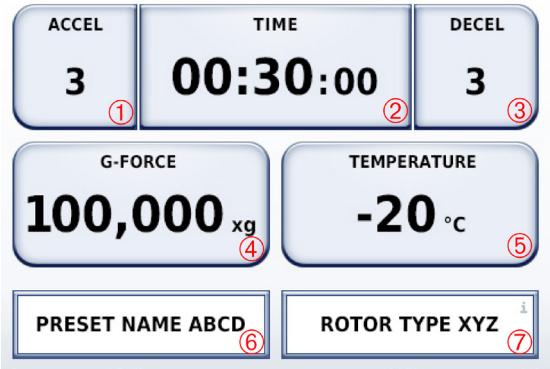

① **Acceleration:** Select an acceleration profile (Level 1-10).

② **Time**: Select the duration for centrifugation and the time mode.

③ **Deceleration**: Select the deceleration profile (Level 1-10).

④ **Speed**: Set the speed as rpm or RCF.

⑤ **Temperature**: Set the temperature (in °C) for the centrifugation chamber.

⑥ **Program**: Select a program for centrifugation. The previously selected program will always be displayed initially. You can change the parameters once you have selected a program. Changing a parameter will cancel the program.

⑦ **Rotor**: The rotor currently in use is displayed.

Control and Configuration

In this section you can start and halt centrifugation. You can also define settings, such as for the centrifugation programs. If you are not sure of the use of a button you can use the tooltip mode, which provides information about all of the operator control elements.

① **Start centrifugation:** Centrifugation can be started using the current set values.

② **Open Door / Stop**: When centrifugation starts, this button switches to **Stop** ⊠.

③ **Configuration**: The configuration menu is displayed when this button is clicked. This button is not active while centrifugation is in progress.

④ **Operator:** In certain modes, touching the operator name opens a window for selecting other operators.

⑤ **Tooltip Mode**: This button is used to activate the tooltip mode. All functional elements are deactivated with this mode. When an element is selected in the tooltip mode a field is displayed with information about that particular element. If you press the tooltip button again, this mode is canceled.

Lighthouse Mode

If no entry is made via the main screen in 30 seconds, the unit changes to lighthouse mode. In this mode, the status, current values and progress display are displayed larger.

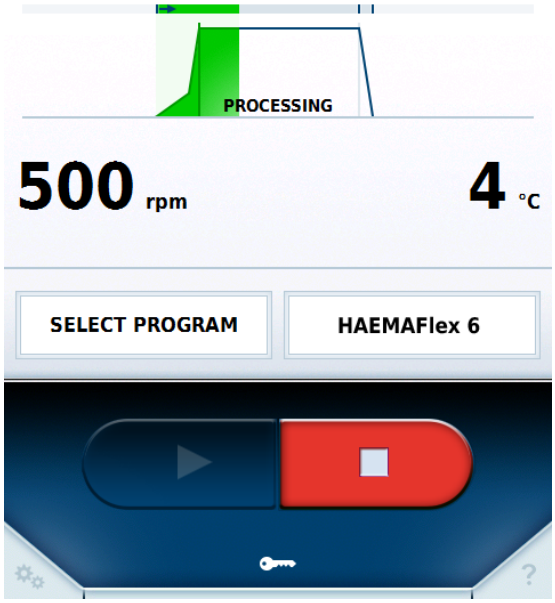

The set value entry fields disappear and the progress display occupies their space. The time display is enlarged, so that the centrifugation status can be seen clearly from a greater distance. It is still possible to stop the centrifuge. Pressing on any area of the screen causes it to exit from lighthouse mode.

Operation

For detailed instructions and information refer to the seperate manual for the Thermo Scientific™ Centri-Touch™ User Interface.

1. Switch on the Centrifuge

Push the switch at the right side.

The centrifuge checks its software. The touchscreen shows the Thermo Scientific logo while booting.

When ready the touchscreen shows the current status of the centrifuge.

2. Open the Centrifuge Door

Press the **Open** button on the touchscreen. [→ 🗎 II–3] The centrifuge door will be opened automatically with the Thermo Scientific™ Auto-Door™ function.

The centrifuge door can only be opened when the centrifuge is switched on.

CAUTION Do not use the mechanical emergency door release as regular procedure to open the centrifuge . Use the mechanical emergency door release only if a malfunction or power failure occurs and only when you have made sure that the rotor stopped spinning. [→ 🗎 V-1])

3. Install a Rotor

WARNING If you have not installed the rotor correctly, do not operate it.
Make sure that the rotor is not damaged. Do not use damaged rotors.
Make sure that the centrifugation chamber is free from objects.

NOTICE Two persons are necessary for this procedure because of the weight of a rotor.

3. 1. Before Installation

Make sure that all rotor parts are clean, dry and have no nicks and scratches. Always use a rotor body, a windshield bowl and a windshield lid that have the same article number.

The windshield bowl and the rotor body of the HAEMAFlex 6 and 6 x 1000 mL Swinging Bucket Rotor are permantently connected and cannot be disassembled.

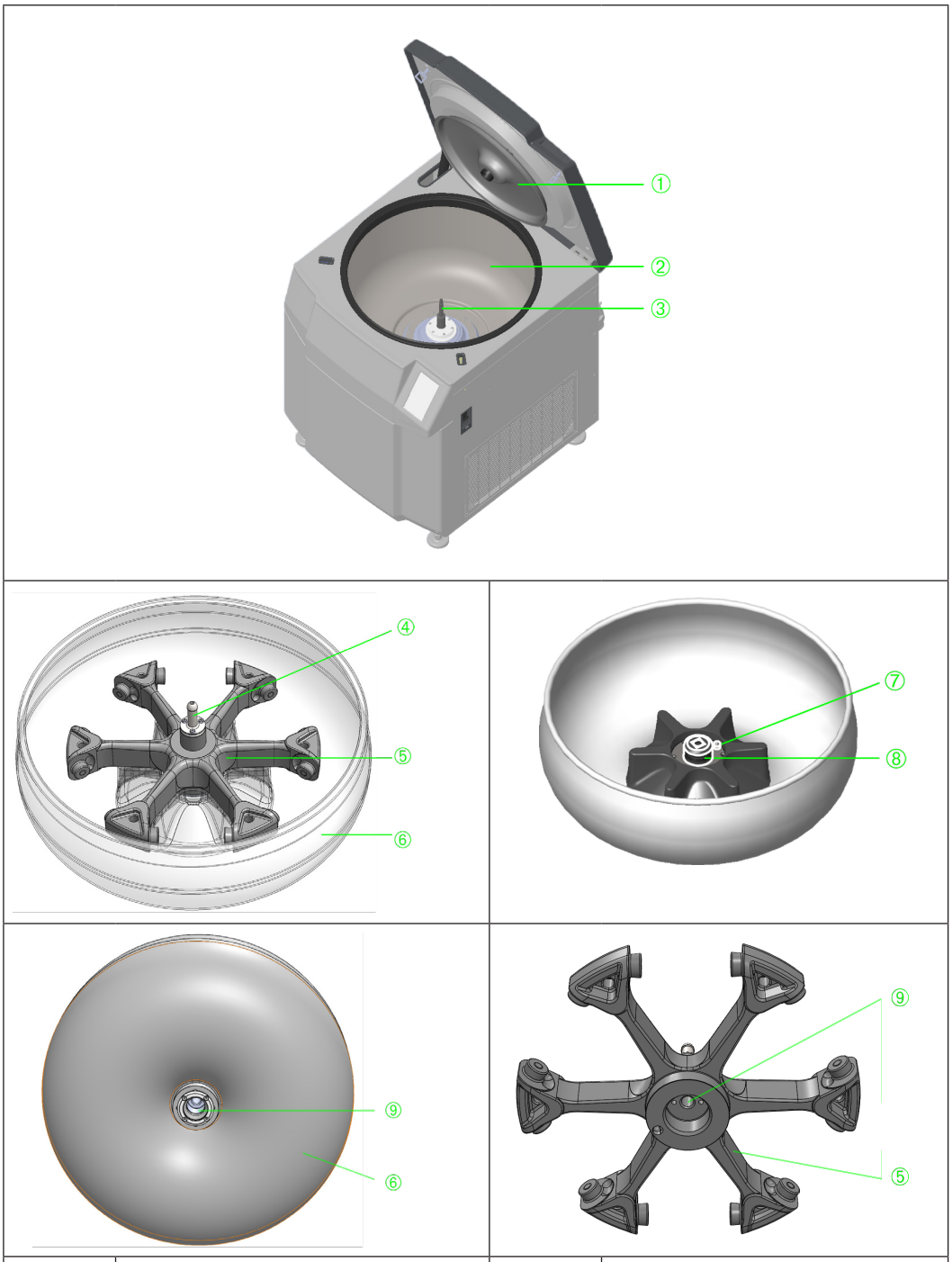

①	Windshield lid	⑤	Rotor body
②	Centrifugation chamber surface	⑥	Windshield bowl
③	Drive shaft	⑦	Locating pin
④	Guiding pin	⑧	Windshield knob
⑨	Rotor hub		

Figure III–1: Overview centrifuge and rotor, e.g. HAEMAFlex 12

3. 2. Selection of Rotor, Buckets and Adapters

Selection of Rotor and Buckets

Depending on the centrifuge different rotors and buckets are available. [→ A–5] You may consider the type of specimen or sample container which shall be centrifuged and centrifugation parameters such as speed and volume for selection of rotor and corresponding buckets.

Install rotor and buckets. [→ III–1]

Selection of Adapters

The following criteria may be used to select an appropriate adapter:

- Volume of specimen or sample container or blood bag
- Configuration of specimen or sample container (e.g. 5/7 ml tube) or blood bag (e.g. two bags/double blood bag)

The adapter is correct when it tightly fits the blood bag or specimen or sample container.

3. 3. Rotor Installation

CAUTION

An an improper installation of the rotor can cause severe damage to the rotor and the centrifuge.
Make sure the rotor is locked properly into place before operating the centrifuge.
Use the rotor locking tool (20360104) clockwise to check if the rotor locking screw is tightened to the firm stop.

CAUTION

If you have not installed the rotor correctly, do not operate it.
Make sure that the rotor is not damaged. Do not use damaged rotors.
Make sure that the centrifugation chamber is free from objects.

1. Open the lid of the centrifuge.

   If necessary remove dust and foreign objects from the chamber.

   Wipe the drive shaft and the rotor hub from the bottom side of the rotor with a clean cloth. Apply one drop of grease (75003786) to the drive shaft.

2. Hold the windshield bowl at the windshield knob with one hand and at the rim with the other hand.

   Put the windshield bowl carefully on the drive shaft.

   For some windshield bowls it may be easier to handle them with 2 people.

3. Align the square symbol on the windshield knob to the square end on the drive shaft.

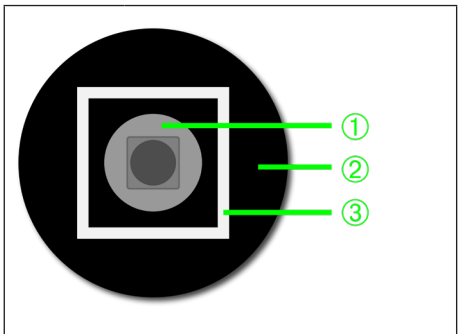

①	Drive shaft
②	Windshield knob
③	Square symbol on windshield knob

Figure III–2: Align windshield knob and drive shaft

4. Identify the circular marking on the rotor body.

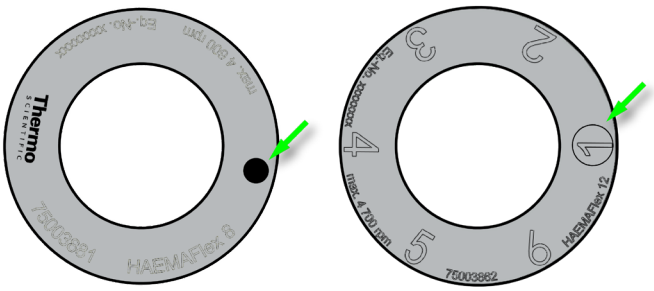

Figure III–3: Identify the circular marking, e.g. HAEMAFlex 8 and 12

The hole for the locating pin of the windshield bowl is on the bottom side of the rotor body below the circular marking. Hold the rotor body over the drive shaft and align the circular marking to the locating pin on the windshield bowl. Put the rotor body carefully on the drive shaft. Turn the rotor body against the windshield bowl until the locating pin engages into the rotor body.

⚠ **CAUTION**	The centrifuge drive can be damaged if the rotor body falls on it.

If the rotor body is not engaged correctly it is not possible to turn the rotor locking screw into the drive shaft. Repeat step 3 and 4 until the rotor body is in position.

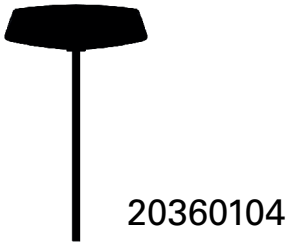

Figure III–4: Rotor locking tool.

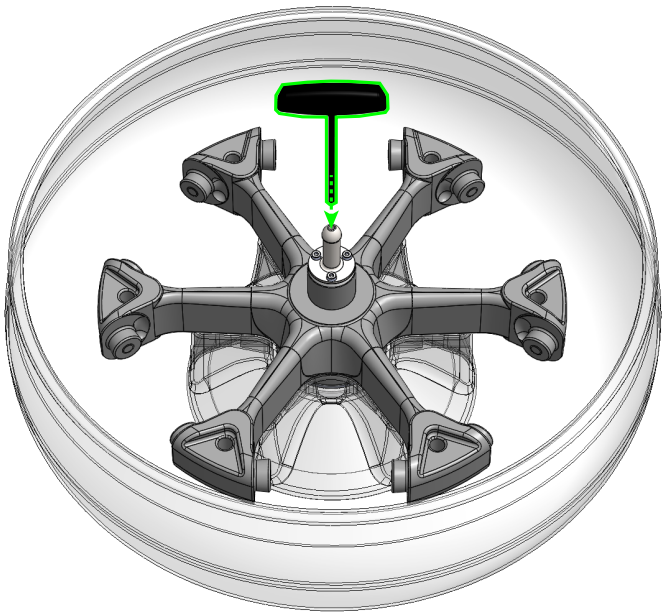

Figure III–5: Put the rotor locking tool.

Put the rotor locking tool (20360073) into the opening of the guidung pin into the rotor locking screw.

Use the rotor locking tool (20360073) clockwise to tighten the rotor with the rotor locking screw to the drive shaft.

⚠ **CAUTION**	An an improper installation of the rotor can cause severe damage to the rotor and the centrifuge. Make sure the rotor is locked properly into place before operating the centrifuge. Use the rotor locking tool (20360104) clockwise to check if the rotor locking screw is tightened to the firm stop.

NOTICE	With the locking screw tightened to a firm stop, by design intention, a small percebtable clearance remains between the rotor and the shaft.

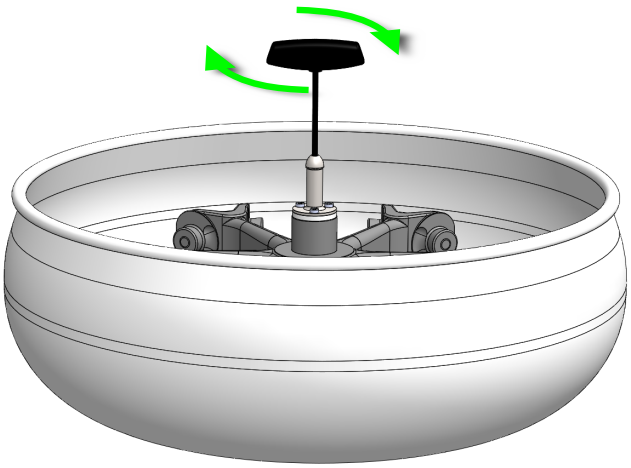

Figure III–6: Tighten the rotor to the drive shaft.

5. Clean and lubricate the rotor trunnion bolts and the two bolt seats on the sides of each bucket. [→ 🗎 IV–3]

   To prevent possible damage to rotor or centrifuge, apply grease (75003786) to the rotor trunnion bolts. This must be done each time you install buckets. One small drop of grease is necessary for each rotor trunnion bolt. Example: each highlighted rotor trunnion bolt in the picture needs to be greased.

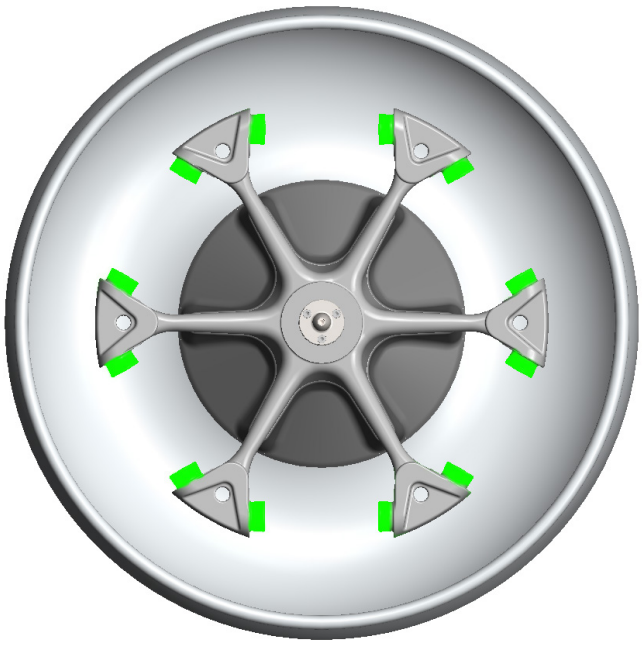

Figure III–7: Lubricate trunnion pins, e.g. HAEMAFlex 12

6. Install an empty bucket in each position. Install buckets with the same weight class on opposing positions. Make sure

that each bucket swings out correctly. They must swing freely on their rotor trunnion bolts.

CAUTION Always use a full complement of buckets, even if some stay empty.

Figure III–8: Install buckets into rotor, e.g. HAEMAFlex 12

When assembling round buckets (75003836/75003936) insert the O-ring below the thread in the bucket. Do not insert it to the bucket lid.

The bucket is assembled correctly, if the handles of the bucket lid are not aligned to the bolt seats of the bucket. If they are aligned to the bolt seats, the bucket is not closed correctly.

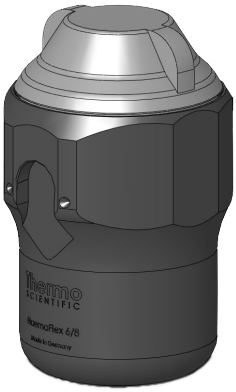

Figure III–9: Correctly assembled round bucket (75003836/75003936, not 75003964)

7. Load the buckets evenly. Balance opposite loads.

CAUTION Incorrect loading can lead to damages. Always load the rotor symmetrically to avoid imbalance, bumpy spinning and possible damages. A full complement of buckets needs to be installed before operating the rotor.

3. 4. Loading Blood Bags

Blood bags that are not properly loaded could possibly result in leakage or breakage of blood bag systems. Leakage and/or breakage can cause contamination.

The following are instructions for properly preparing blood collection systems for centrifugation:

1. Attach all buckets to the rotor and ensure all buckets move freely. All buckets must be in place before run. Choose a centrifugation setting that will achieve the optimal yield for your procedure.
2. When possible, use the ACE integrator function to standardize centrifugation from run to run for better reproducibility and consistency.
3. Gently mix the blood bag by inversion.
4. Blood bag systems should be packed following the blood bag manufacturer´s instructions.
5. Blood bag systems must be placed into adapters. Thermo Scientific adapters and linerstands are used for simplifying the adapter loading and unloading process. It enables easier transportation and stabilization of blood bags in an effort to improve the quality of the blood separation. Spacers should be used to compensate for low volume blood bags.
6. Counterbalance all adapters and use weights as necessary.
7. Place the adapters into the buckets.
8. Make sure all tubing is secured inside the centrifuge bucket. During loading, the tubing must be put between the bags with the bag tabs remaining upright to prevent them from becoming tangled around the rotor body during centrifugation.

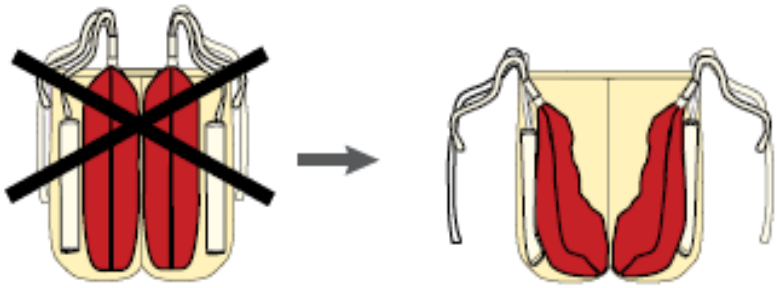

Tubing outside of the adapter

Syphoning of blood.

Risk of centrifuge cycle failure

Figure III–10: Incorrect loading of tubing not properly secured

9. Blood bags with a low volume must be compensated by using spacers or balance bags. Without compensation, low volume blood bags could result in red cell traps. As balancing bags could easily break after several centrifugation runs, select spacers for use over a longer time period.

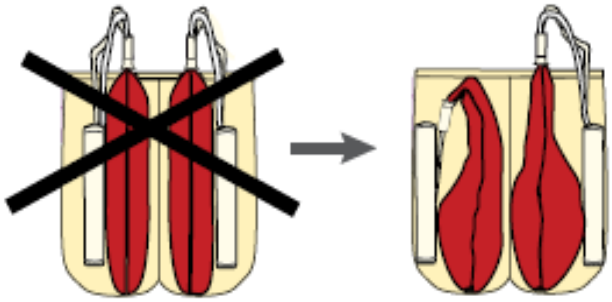

Low volume, bags without compensation

Red cell traps

Figure III–11: Incorrect loading of bags without compensation

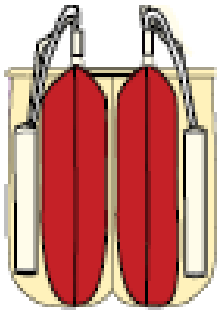

Correct loading. No need for spacers or balance bags

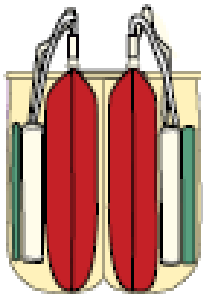

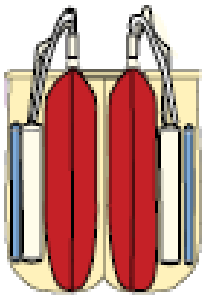

Correct loading. Low volume blood bag systems, spacers or balance bags are needed

Figure III–12: Correct loading

10. Prior to centrifugation all adapters should be loaded with blood bag systems. Never run empty adapters. If there is only one blood bag system left, then the empty cavity of the adapter should be filled with water filled bags.

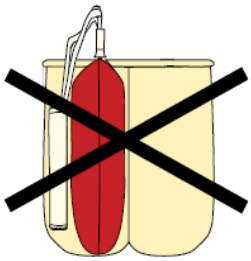

Incorrect loading

Blood bag systems only in one cavity

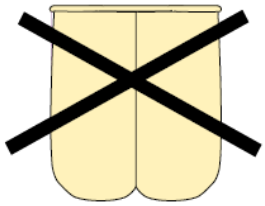

Running empty adapters

is not permitted

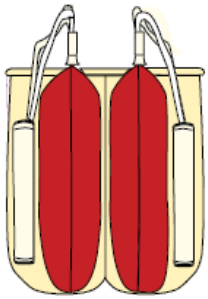

Correct loading

Blood bag systems in each cavity

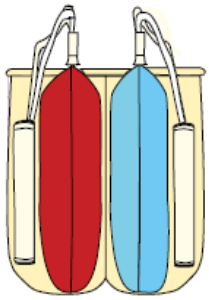

Correct loading

Water filled bag is used instead

Figure III–13: Incorrect loading of only one cavity loaded and correct loading of full adapters.

Correct Loading ✓

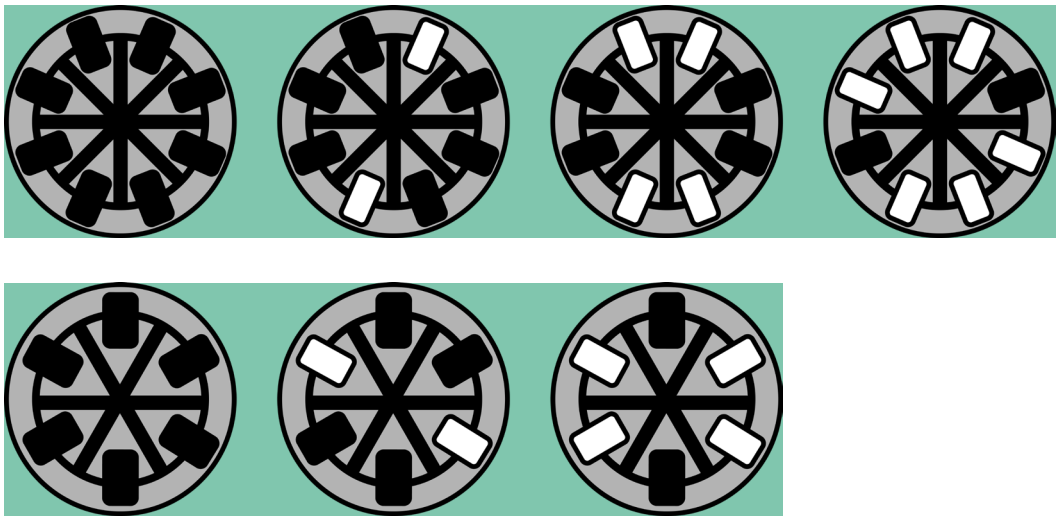

Figure III–14: Correct Loading

Incorrect Loading ×

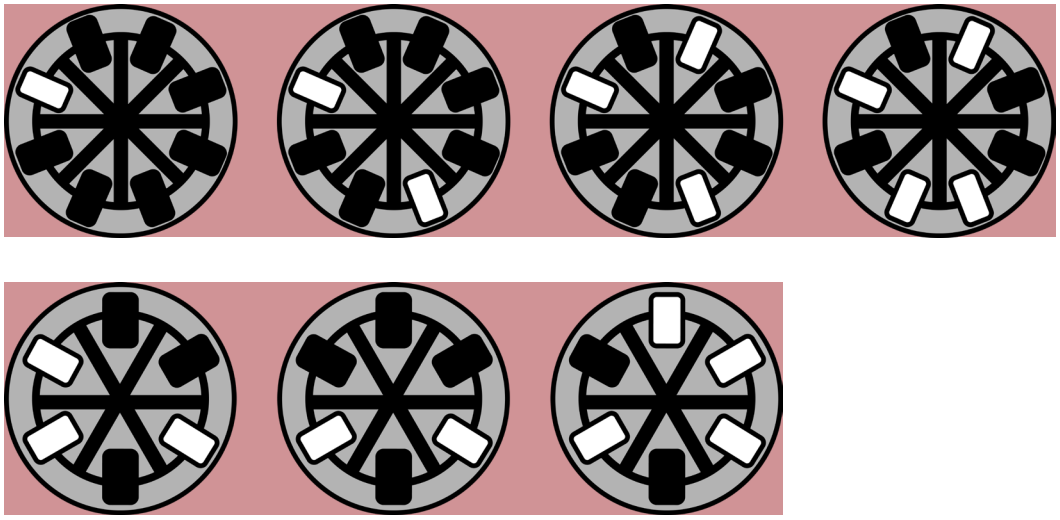

Figure III–15: Incorrect Loading

11. Put the windshield lid into the holder at the inner side of the centrifuge door. The Thermo Scientific™ Auto-Lid™ function automatically opens and closes the windshield when the centrifuge door opens and closes.

    The windshield lid has to be put into the holder at the inner side of the centrifuge door to correctly open and close the windshield.

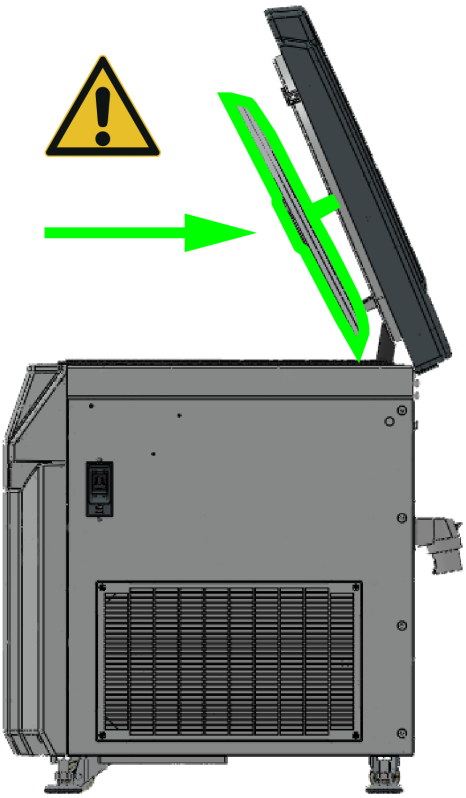

Figure III–16: Insert windshield lid into holder

CAUTION Always put the windshield lid into the holder at the inner side of the centrifuge door. Make sure the rotor is locked properly. A missing windshield lid and an unlocked rotor can lead to severe damage of rotor and centrifuge.

4. Maximum Loading

Each rotor is designed to run with his maximum load at maximum speed. The safety system of the centrifuge requires that the rotor is not overloaded.

The rotors are designed to work with substance mixtures with a density of up to 1.2 g/ml. If the admissible maximum load is exceeded the following steps need to be taken:

- Reduce the fill level.
- Reduce the speed.

Use the table or the formula:

$$n_{adm} = n_{max} \sqrt{\frac{w_{max}}{w_{app}}}$$

n_{adm} = admissible maximum application speed

n_{max} = maximum rated speed

w_{max} = maximum rated load

w_{app} = applied load

Use of Tubes and Consumables

Care should be taken to ensure that the tubes and bottles used in the centrifuge are:

- rated to or above the selected RCF to be spun at,
- used at there minimum fill volume,
- not used above their design life (age or number of runs),
- undamaged.

Please refer to manufacturers data sheets for further information.

5. Close the Centrifuge Door

WARNING Do not grab into the clearance between the centrifuge door and the housing. The centrifuge door shuts automatically. Put your hands always on top of the centrifuge door. Use the emergency release only for malfunctions and electrical failures. [→ V-1]

NOTICE If the centrifuge door is open when the centrifuge is switched on, the centrifuge door needs to be closed manually. Only then, the centrifuge can be operated using the touchscreen.

Close the centrifuge door with the Auto-Door function by pressing on the **Close** button on the touchscreen. The centrifuge door will be automatically closed. Two locks close the centrifuge door fully. When closed, the touchscreen shows the **Start** button.

6. Entering Parameters

NOTICE If the centrifuge door is open when the centrifuge is switched on, the centrifuge door needs to be closed manually. Only then, the centrifuge can be operated using the touchscreen.

6. 1. Acceleration / Deceleration Profiles

There are 10 curves (1-10) for acceleration and 10 for deceleration (1-10). The acceleration / deceleration profile can be selected in the main screen.

Touch the number of the desired profile or move the slider by sliding your fingers over the numbers.

Select **Apply** to confirm this selection for the next run.

The profile with the lowest number has the shallowest incline marked with **min**; profile number 10 is the steepest incline which is marked with **max**.

6. 2. Preselect Speed / RCF-Value

1. Press on the speed field on the main screen.
2. Press rpm or RCF. The selected function is highlighted in yellow.
3. Enter the desired value. The digits show in sequential order.
4. Confirm your entry by pressing **Confirm**.

NOTICE If a speed or RCF-value out of the nominal range has been selected, a message will appear with the permissible values.

Explanation of RCF-Value

The relative centrifugal force (RCF) is given as a multiple of the force of gravity (g). It is a unitless numerical value which is used to compare the separation or sedimentation capacity of various centrifuges, since it is independent of the type of device. Only the centrifuging radius and the speed are used for calculation:

$RCF = 11.18 \times \left(\frac{n}{1000}\right)^2 \times r$

r = centrifuging radius in cm

n = rotational speed in rpm

The maximum RCF value is related to the maximum radius of the tube opening.

Remember that this value is reduced depending on the tubes and buckets used.

This can be accounted for in the calculation above if required.

6. 3. Runtime Preselection

1. Press the time field on the main screen to open the runtime selection menu.
2. Press **Time**, **Hold** or $\int \omega^2 dt$, depending on the value you would like to change.
3. Enter the desired value using the numeric pad. The digits show in sequential order.
4. Confirm your entry by pressing **Confirm**.

Time	Hold	ACE
Duration of centrifugation; input as hh:mm. The set time is counted down when centrifugation is in progress. Initial value: Defined duration hh:mm:00	Unlimited duration of centrifugation. The time elapsed so far is displayed while centrifugation is in progress. Initial value: 00:00:00	Accumulated Centrifugal Effect enter in $x.y * 10^z$ X: Whole digits (1st input field) Y: Decimal numbers (2nd input field) Z: Power (3rd input field)

6. 4. Preselect Temperature

You can preselect temperatures between -20 °C and 40 °C.

To set the temperature, proceed as follows:

1. Press the temperature field in order to open the temperature menu.
2. Enter the desired temperature. The digits show in sequential order.
3. Confirm your entry by pressing **Confirm**.

6. 5. Pre-warm or Pre-cool the Centrifuge

To pre-temp the centrifuge, proceed as follows:

1. Use **Configuration** and **Runs** to select a stored program. The pre-temp function is connected to a program.
2. Press **Load** to select programmed parameters. In the main screen you can then set the required target temperature.

7. Programs

For detailed instructions and information refer to the according manual for the Thermo Scientific Centri-Touch User Interface.

The instructions stated here are just an extract of how to work with programs.

1. Press on the touchscreen.

   If a program is already loaded, the program name will be shown on the button.

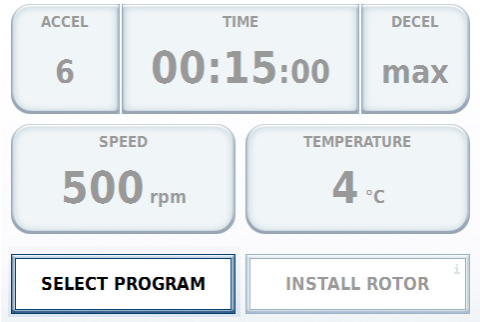

Figure III–17: Select program

2. Press **New**.

   a. Check the parameter. Change the parameter if necessary.

      To change a parameter, press the button of the parameter you want to change.

      Press **Apply**.

   b. Press **Enter Name**.

      Enter a name for the program.

      Press **Apply**.

   c. Press **Select Rotor**.

      Select a rotor.

      Press **Apply**.

      Select a bucket using the drop-down menu.

      Press **Apply**.

3. Press **Apply** to save the program.

4. Press the new created program.

   Press **Load**.

   The program is now loaded and can be used.

8. Centrifugation

WARNING Do not operate the centrifuge on its casters.

WARNING Make sure that the power supply cable is properly hanging on the cable holder on the back of the centrifuge. The flag attached to the power supply cable must be within 0 to 15 cm from the cable holder, marking the end of the part of the power supply cable that needs to hang on the cable holder.

CAUTION Make sure the rotor is locked properly into place before operating the centrifuge.
Make sure once a week that the rotor locking screw is locked properly. Use the rotor locking tool (11246) clockwise to check if the rotor locking screw is tightened to the firm stop.

NOTICE The external tubing must be visually inspected before a centrifugation run is started.

8. 1. Start

Press the **Start** key on the touchscreen. The centrifuge accelerates to the preset speed with the time display active. After 30 seconds the touchscreen switches to the lighthouse mode. Pressing anywhere on the touchscreen ends the lighthouse mode. [→ 🗎 II–4]

You cannot open the centrifuge door as long as the centrifuge is running.

8. 2. Stop

With preset Run Time

Usually the run time is preset and you only have to wait until the centrifuge stops automatically when the preset time limit expires.

As soon as the speed drops to zero, the message **Complete** will appear on the touchscreen. Press **Open Door** to open the centrifuge door and remove the samples.

You can also stop the centrifuging program manually at any time by pressing **Stop** ❑. If the lighthouse mode is active, end it by pressing anywhere on the touchscreen. [→ 🗎 II–4]

Continuous Operation

If you selected continuous operation, you will have to stop the centrifuge manually. Press **Stop** ❑ on the touchscreen. The centrifuge will be decelerated at the designated rate. If the lighthouse mode is active, end it by pressing anywhere on the touchscreen. [→ 🗎 II–4] The message **Complete** will appear on the touchscreen. Press **Open Door** to open the centrifuge door and remove the samples.

9. Remove a Rotor

WARNING Risk of cuts through fast rotating windshield lid.
Do not open the centrifuge door while the rotor assembly spins.
Only when the rotor assembly has stopped, use the mechanical emergency centrifuge door release.

NOTICE For your protection when using an aerosol-tight rotor the bucket should only be removed with the lid closed.

NOTICE Two people are necessary to remove the rotor because of its weight.

1. Open the centrifuge door. The centrifuge door lifts the windshield lid automatically.

   The centrifuge door can only be opened when the centrifuge is switched on.

   Press the **Open Door** button on the touchscreen. The centrifuge door will be automatically opened.

CAUTION Do not use the mechanical emergency door release as regular procedure to open the centrifuge. Use the mechanical emergency door release only if a malfunction or power failure occurs and only when you have made sure that the rotor stopped spinning. [→ V-1]

2. Remove the windshield lid from the holder inside the centrifuge door.
3. Unload the buckets.
4. Remove the buckets.
5. Use the rotor locking tool (20360073) to disengage the rotor locking screw.

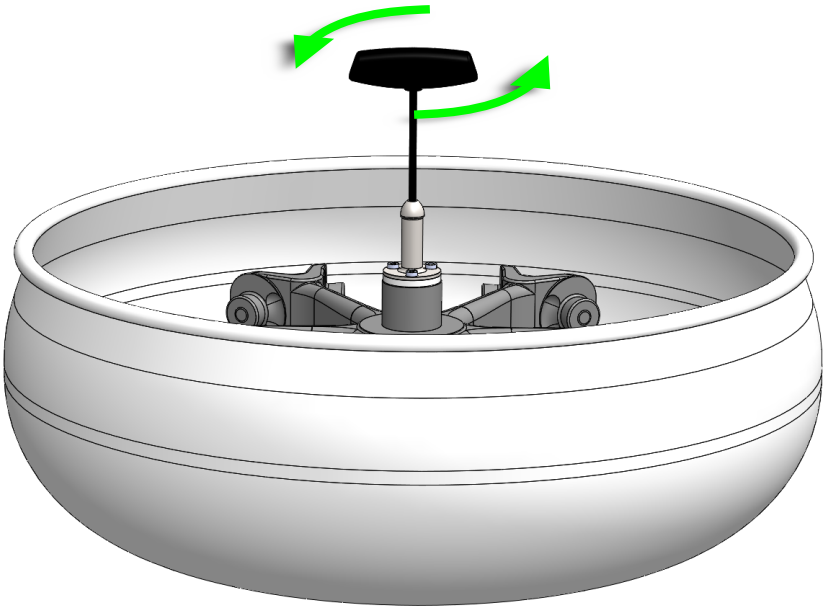

Figure III–18: Remove the rotor from the drive shaft.

6. Remove the rotor from the drive shaft.

CAUTION The centrifuge drive can be damaged if the rotor body falls on it.

7. Hold the windshield knob with one hand and at the rim of the windshield bowl with the other.

Lift the windshield bowl straight from the drive shaft.

For some windshield bowls it may be easier to handle them with 2 persons.

10. Switch off the Centrifuge

Turn off the power supply switch located on right side of the centrifuge.

IV

Maintenance and Care

1. Cleaning Intervals

For the sake of personal, environmental and material protection, you must clean and if necessary disinfect the centrifuge and its components on a regular basis.

The external tubing must be visually inspected at least once a month or before every longer centrifugation run.

2. Basics

WARNING

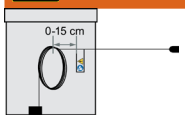

Make sure that the power supply cable is properly hanging on the cable holder on the back of the centrifuge. The flag attached to the power supply cable must be within 0 to 15 cm from the cable holder, marking the end of the part of the power supply cable that needs to hang on the cable holder.

CAUTION

Not rated procedures or agents could deteriorate the materials of the centrifuge and lead to malfunction.
Refrain from using any other cleaning or decontamination procedure, if you are not entirely sure that the intended procedure is safe for the equipment.
Use only cleaning agents that will not damage the equipment. In doubt contact the manufacturer of the cleaning agent.
If in doubt, contact Thermo Fisher Scientific.

- Use warm water with a neutral detergent that is suitable for use with the materials. If in doubt contact the manufacturer of the cleaning agent.
- Never use caustic cleaning agents such as soap suds, phosphoric acid, bleaching solutions or scrubbing powder.
- Remove rotor and clean centrifugation chamber with a small amount of cleaning agent on a clean cloth.
- Use a soft brush without metal bristles to remove stubborn residue.
  Afterwards rinse with a small amount of distilled water and remove any remains with absorbent towels.
- Use only disinfectants with a pH of 6-8.

2. 1. Rotor and Components Inspection

⚠ **CAUTION**	Do not run any rotor or components with sign of damage. Ensure that the rotor, buckets and components are within the service life and number of cycles. It is recommend that you have rotors and components inspected yearly as part of your routine service to ensure safety.

After thoroughly cleaning the rotors, they must be inspected for damage, wear and corrosion.

The cycle limits of the rotors are stated in the technical data section of each rotor. [→ 🗎 B–1]

NOTICE	Usage beyond these limits might lead to rotor failure, sample loss and damage to the centrifuge.

The cycle limits of the buckets are stated on the buckets themselves and stated in the technical data section of each rotor. [→ 🗎 B–1]

NOTICE	Usage beyond these limits might lead to rotor failure, sample loss and damage to the centrifuge.

Metal Parts

Ensure that the protective coating is complete. It can be removed through wear and chemical attack and can lead to unseen corrosions. In case of corrosion, such as rust or white / metallic pitting, the rotor or components must be removed from service immediately. Particular attention should be paid to the bottom of buckets on swing out rotors and tube cavities on fixed angle rotors.

Plastic Parts

Check for signs of plastic crazing, fading, bruising or cracking. In case of damage the inspected item must be removed from service immediately.

Cycles of Rotors and Buckets

The centrifuge counts cycles for a rotor type. The centrifuge does not count the cycles of the buckets. You have to count the cycles of the buckets using your own method. The centrifuge can not detect the change or replacement of rotors of the same type or buckets.

The service lifetime of a rotor and its buckets depends on the amount of physical load. Do not use rotors and buckets that exceed the maximum number of cycles.

The maximum number of cycles for rotors is given in the Rotors chapter. [→ 🗎 B–1]

The maximum number of cycles for buckets is marked on the buckets themselves.

You can check the number of cycles for a rotor type on the user interface of the centrifuge. The rotor log saves the information of the used rotors and buckets. Press **Settings** (gears symbol), then **Runs** and then **Rotor Log** to see the information. Besides the values of the rotor an information about the number of cycles completed by this rotor type in this centrifuge is shown.

For detailed instructions and information refer to the separate manual for the Thermo Scientific Centri-Touch User Interface.

3. Cleaning

CAUTION Before using any cleaning methods, users should check with the manufacturer of the cleaning agents that the proposed method will not damage the equipment.

CAUTION Drive and door lock can be damaged by entering liquids. Do not allow liquids, especially organic solvents, to get on the drive shaft, the drive bearings or the centrifuge door locks.
Organic solvents break down the grease in the motor bearing. The drive shaft could lock up.

Clean as follows:

1. Clean rotor, buckets and components outside of the centrifugation chamber.
2. Separate rotor, buckets, lids, adapters and tubes to allow thorough cleaning.
3. Rinse rotor and all components with warm water and a neutral detergent that is suitable for use with the materials. If in doubt contact the manufacturer of the cleaning agent. Clean away the grease from the rotor trunnions (pivot point for swinging buckets).
4. Use a soft brush without metal bristles to remove stubborn residue.
5. Rinse rotor and all components with distilled water.
6. Place the rotors on a plastic grate with their cavities pointing down, to enable the cavities to fully drain and dry.
7. Dry all of the rotors and components after cleaning with a cloth or in a warm air cabinet at a maximum temperature of 50 °C. If drying boxes are used, the temperature must never exceed 50 °C. Higher temperatures could damage the material and shorten the lifetime of the parts.
8. Inspect the rotor and components for signs of damages. [→ IV–2]
9. After cleaning, treat the entire surface of aluminum parts including the cavities with corrosion protection oil (70009824).

   Treat the bolts of the swing out rotor with bolt grease (75003786).

Clean the bucket surfaces and rotor bolts as follows:

a. Cut a cleaning pad (66309) into 12 mm (1/2 inch) wide strips.

b. Saturate one of the pad strips with acetone or alcohol.

c. Wrap the pad strip around a rotor bolt and move it back and forth in an oscillating motion. Move the strip around to clean the trunnion bolt completely. Repeat this process for each trunnion bolt.

d. Saturate another pad strip and thoroughly clean the bearing surfaces of each bucket.

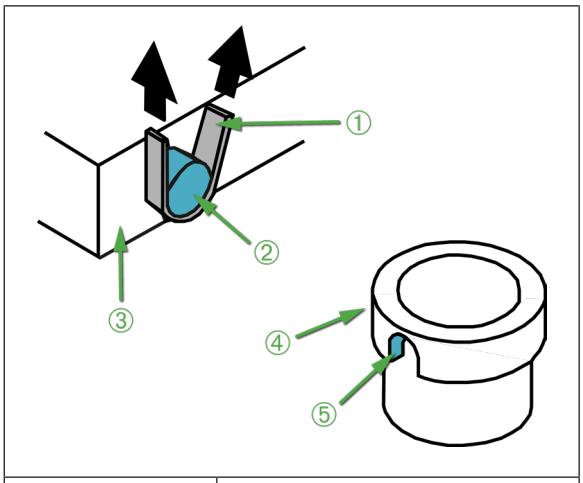

①	Cleaning pad strip
②	Rotor bolt
③	Rotor body
④	Bucket
⑤	Bearing Surface

Figure IV–1: Cleaning rotor bolts and bucket bearing surfaces

e. Wipe the cleaned surfaces with a clean cloth.

f. After cleaning, treat the entire surface of aluminum parts including the cavities with corrosion protection oil (70009824).

Treat the bolts of the swing out rotor with bolt grease (75003786).

3. 1. Touchscreen

1. Pull out the power supply plug.
2. Clean the touchscreen using a dry microfiber cloth.
3. If necessary moisten the microfiber cloth and wipe the touchscreen again.

4. Disinfection

WARNING

Do not touch infected parts.
Hazardous infection is possible when touching the contaminated rotor and centrifuge parts. Infectious material can get into the centrifuge when a tube breaks or as a result of spills.
In case of contamination, make sure that no one is put at risk.
Disinfect the affected parts immediately.

CAUTION

Equipment can be damaged by inappropriate disinfection methods or agents.
Make sure that the disinfection agent or the method will not damage the equipment. In doubt contact the manufacturer of the disinfection agent.
Observe the safety precautions and handling instructions for the disinfection agents used.

After disinfection:

1. Rinse the centrifuge and all affected components with water.
2. Allow to fully drain and dry.
3. After disinfecting, treat the entire surface of aluminum parts including the cavities with corrosion protection oil (70009824).

   Treat the bolts of the swing out rotor with bolt grease (75003786).

5. Decontamination

WARNING

Do not touch contaminated parts.
Exposure to radiation is possible when touching the contaminated rotor and centrifuge parts. Radioactive material can get into the centrifuge when a tube breaks or as a result of spills.
In case of contamination, make sure that no one is put at risk.
Decontaminate the affected parts immediately.

CAUTION

Equipment can be damaged by inappropriate decontamination methods or agents.
Make sure that the decontamination agent or the method will not damage the equipment. In doubt contact the manufacturer of the decontamination agent.
Observe the safety precautions and handling instructions for the decontamination agents used.

After decontamination:

1. Rinse the centrifuge and all affected components with water.
2. Allow to fully drain and dry.
3. After decontaminating, treat the entire surface of aluminum parts including the cavities with corrosion protection oil (70009824).

   Treat the bolts of the swing out rotor with bolt grease (75003786).

6. Autoclaving

CAUTION Never exceed the permitted temperature and duration when autoclaving.

NOTICE No chemical additives are permitted in the steam.

As preparation always separate rotor, buckets, lids, adapters, tubes and sealing rings to allow thorough cleaning. If installed, remove lids from rotors, buckets and tubes.

Within the list of components marked parts can be autoclaved at 121 °C for 20 min. [→ 🗎 A–5]

Make sure that the necessary sterility is achieved according to your requirements.

After autoclaving, treat the entire surface of aluminum parts including the cavities with corrosion protection oil (70009824).

Treat the bolts of the swing out rotor with bolt grease (75003786).

7. Maintenance

7. 1. Preventive Maintenance

In order to keep this product able to perform the intended application in a reliable and safe state, ongoing preventive maintenance is necessary in accordance with the following recommended schedule:

- For rotors and buckets mind the information in the Rotor and Components chapter: [→ IV–2]
- The anti-vibration mounts need to be replaced every 3 years.
- The centrifuge needs to be decommissioned after 15 years or 150 000 cycles, whichever comes first.

CAUTION Usage beyond these limits might affect the safety of the overall system.

7. 2. Service

The anti vibration mounts (50151096) need to be replaced every three years by a Thermo Fisher Scientific authorized service technician or earlier if noticed. If the anti vibration mounts are not replaced within this period the performance of the centrifuge can decrease.

NOTICE In the worst case the centrifuge, the used components and the samples can be damaged.

Thermo Fisher Scientific recommends having the centrifuge and components serviced once a year by an authorized service technician. The service technician checks the following:

- electrical equipment
- suitability of set-up site
- centrifuge door lock and safety system
- rotor
- fixation of rotor and drive shaft of the centrifuge
- protective casing
- anti-vibration mounts

Before service, centrifuge and rotors should be thoroughly cleaned and decontaminated to ensure full and safe inspection can be completed.

Thermo Fisher Scientific offers inspection and service contracts for this work. Any necessary repairs are performed for free during the warranty period and afterwards for a charge. That is only valid if the centrifuge has only been maintained by an authorized Thermo Fisher Scientific service technician.

8. Shipping and Disposal

WARNING When removing the centrifuge and components from use for disposal you have to clean and if necessary disinfect or decontaminate the entire system. In doubt contact the Thermo Fisher Scientific customer service.

For the disposal of the centrifuge mind the regulations in your country. Contact the Thermo Fisher Scientific Customer Service for the disposal of the centrifuge. For contact information check the back page of this manual or visit www.thermofisher.com/centrifuge

For the countries of the European Union the disposal is regulated by the European Union's Waste Electrical & Electronic Equipment (WEEE) Directive 2012/19/EU.

Mind the information on transport and shipping. [→ I–3]

V

Troubleshooting

1. Mechanical Emergency Door Release

WARNING

Serious injuries can occur, if you touch a spinning rotor with your hands or tools.
A rotor can still be spinning after a power failure occurs.
Do not open the centrifuge before the rotor has stopped spinning. Do not touch a spinning rotor. Never use your hands or tools to stop a spinning rotor.

During a power failure, you will not be able to open the centrifuge door with the regular electric centrifuge door release. A mechanical override is provided to allow sample recovery in the case of an emergency. The mechanical override should be used only in emergencies and **after the rotor has come to a complete stop**.

Always wait until the rotor has come to a stop without braking. The brake does not work without power supply. The deceleration process lasts much longer than usual.

Proceed as follows:

1. **Wait until the rotor has stopped.** It can take longer than 40 minutes.

   Use the sight glass in the centrifuge door to make sure that the rotor has stopped. The handle of the windshield lid has a marking, that shows a semicircle, if the rotor has stopped.

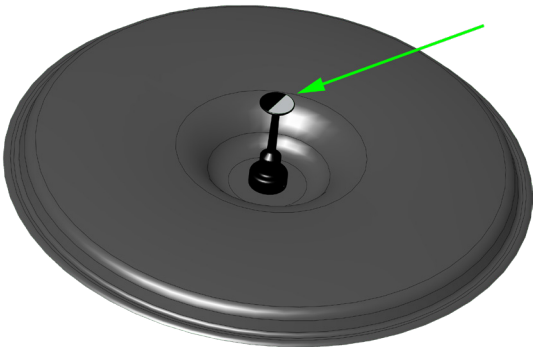

Figure V–1: Marking on windshield lid

2. Pull out the power supply plug.
3. On both sides of the housing are two white plastic plugs. Get these two white plastic plugs out of both sides of the housing. Pull the release cords on both sides to trigger the mechanical centrifuge door release. The centrifuge door needs to be lifted manually. You need some force to lift the centrifuge door manually.

Figure V–2: Position of the mechanical emergency door release

4. Put the release cords back into the centrifuge and put the white plastic plugs back into the centrifuge housing.
5. Reconnect the centrifuge to the power supply when the power failure has ended.

2. Ice Formation

Warm humid air in combination with a cold centrifugation chamber can lead to formation of ice.

To remove the ice out of the centrifuge chamber:

1. Open the centrifuge door.
2. Remove the rotor. [→ 🗎 III–15]
3. Let the ice melt.

NOTICE	Do not use any sharp tools, aggressive liquids or fire to fasten the melting process. If necessary use warm water to fasten the melting process.

4. Remove the water from the centrifuge chamber.
5. Clean the centrifuge chamber. [→ 🗎 IV–1]

3. Troubleshooting by Guide

CAUTION If problems occur other than those listed in this table, service technician must be contacted.

If an error occurs, follow the instructions on the touchscreen. Error messages have a red colored background.

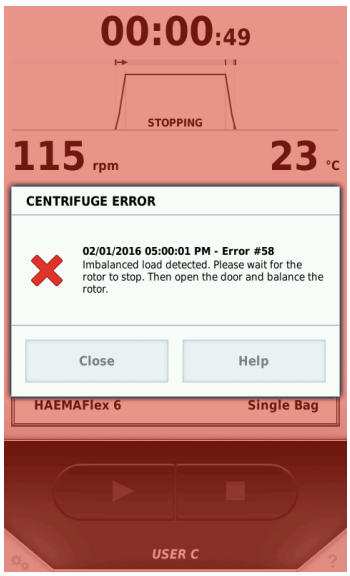

Figure V–3: Example for an error message

Error Message	Description	Troubleshooting
E-1 to E-97		Switch the centrifuge off and on again. Make sure that the correct windshield lid is inserted into the holder. Move the drive shaft slightly towards the front of the centrifuge. If the error message still shows, contact a service technician.
E-98	Centrifuge can not be operated. Centrifuge run can not be started or centrifuge is braking.	Imbalance detected. Check the loading of the rotor. Check the lubrication of the trunnion bolts of the rotor body. Switch the centrifuge off and on again. If the error message still shows, contact a service technician.
E-99		Switch the centrifuge off and on again. If the error message still shows, contact a service technician.

Table V–1: Error messages

4. Information for the Customer Service

If you need to contact a service technician, please provide the order no. and the serial no. of your centrifuge. This information can be found on the back near the inlet for the power supply cable.

To identify the software version, proceed as follows:

1. Switch on the centrifuge.
2. Open the configuration menu.
3. Select **Configuration**.
4. Select **Device**.

   Now you can read all required data.

A

Technical Specifications

Environmental Conditions	Altitudes of up to 3 000 m above sea level Max. relative humidity 80 % up to 31 °C; decreasing linearly to 50 % relative humidity at 40 °C
Environmental Conditions during Storage and Shipping	Temperature: -10 °C to 55 °C Humidity: 15 % to 85 %
Permissible Ambient Temperature during Operation	2 °C to 35 °C

Average Heat Dissipation	< 2 KW/h
Overvoltage Category	II
Pollution Degree	2
IP	20
Running Time	99 h 59 min 59 sec (1 second increment)
Maximum Speed n_{max} (BP 8 / BP 16 Heavy Duty Water Cooled)	5 000 rpm / 4 700 rpm
Minimum Speed n_{min}	300 rpm
Maximum RCF Value at n_{max} (BP 8 / BP 16 Heavy Duty Water Cooled)	7 295 x g / 7 187 x g
Noise Level at Maximum Speed[1]	55 dB (A)
Maximum Kinetic Energy	225 KJ
Temperature Setting Range	-20 °C to 40 °C

Dimensions	
Height (open door / closed door)	1 750 mm / 1 015 mm (68.9 in / 39.4 in)
Width	816 mm (32.1 in)
Depth	900 mm (35.4 in)
Weight[2] 200, 208, 220, 230, 240 V, 50/60 Hz	479 kg (1 056 lb)

[1] 1 m in front of the instrument at 1.6 m height.

[2] Without rotor.

Table A–1: Technical Data Sorvall BP 8 / 16 Heavy Duty Water Cooled

1. Directives, Standards and Guidelines

Centrifuge	Region	Directive	Standard
Thermo Scientific Sorvall BP 8 Heavy Duty Water Cooled Thermo Scientific Sorvall BP 16 Heavy Duty Water Cooled	**Europe** Single Phase 220, 230 V, 50 / 60 Hz	**(EU) 2017/745** Medical Device Regulation (MDR**)** **(EU) 2017/746** In vitro diagnostic regulation (IVDR) **2006/42/EC** Machinery (Protective Goals) **2014/35/EU** Low Voltage (Protective Goals) **2014/30/EU** Electromagnetic Compatibility (EMC) (Protective Goals) **2011/65/EU RoHS** Directive on the Restriction of the use of certain Hazardous Substances in electrical and electronic equipment	EN 61010-1 EN 61010-2-020 EN/IEC 61010-2-011 EN 61010-2-101 EN 61326-1 Class B EN 62304 EN 61326-2-6 EN 62366-1 EN ISO 14971 EN ISO 13485
	USA & Canada Single Phase 208, 230, 240 V, 60 Hz	**FDA listed** Product Code KSO Centrifuge, Blood-Bank For In Vitro Diagnostic Use Device Class 1	ANSI/UL 61010-1 IEC 61010-2-020 IEC 61010-2-011 IEC 61010-2-101 IEC 61326-1 Class B EN 62304 EN 62366-1 EN ISO 14971 EN ISO 13485 FCC Part 15
	Japan Single Phase 200 V, 50 / 60 Hz		IEC 61010-1 IEC 61010-2-020 IEC 61010-2-011 IEC 61010-2-101 IEC 61326-1 Class B EN 62304 EN 62366-1 EN ISO 14971 EN ISO 13485

Table A–2: Directives, Standards and Guidelines Sorvall BP 8 / 16 Heavy Duty Water Cooled

NOTE This equipment has been tested and found to comply with the limits for a Class B digital device, pursuant to part 15 of the FCC Rules. These limits are designed to provide reasonable protection against harmful interference in a residential installation. This equipment generates, uses and can radiate radio frequency energy and, if not installed and used in accordance with the instructions, may cause harmful interference to radio communications. However, there is no guarantee that interference will not occur in a particular installation. If this equipment does cause harmful interference to radio or television reception, which can be determined by turning the equipment off and on, the user is encouraged to try to correct the interference by one or more of the following measures:

- Reorient or relocate the receiving antenna.
- Increase the separation between the equipment and receiver.
- Connect the equipment into an outlet on a circuit different from that to which the receiver is connected.

2. Refrigerants

Centrifuge	Refrigerant	Quantity	Pressure	GWP	CO_2e
Thermo Scientific Sorvall BP 8 Heavy Duty Water Cooled	R-449A	1.79 kg	34 bar	1 397	2.50 t
Thermo Scientific Sorvall BP 16 Heavy Duty Water Cooled	R-449A	1.79 kg	34 bar	1 397	2.50 t

Contains fluorinated greenhouse gases in a hermetically sealed system.

Table A–3: Refrigerants used in the Sorvall BP 8 / 16 Heavy Duty Water Cooled

3. Mains Supply

The following data is to be taken into consideration, when selecting the mains connection socket.

Mains Voltage (V)	Frequency (Hz)	Rated Current (A)	Power Consumption (W)	Building Fuse (A)[1]	Equipment Fuse (A)
200	50	27.0	5 100	30	30
208	50	24.0	5 100	30	30
220	50	24.0	5 100	30[2]	30
230	50	23.5	5 100	30[2]	30
240	50	22.5	5 100	30[2]	30
200	60	27.0	5 350	30[4]	30
208	60	24.0	5 350	30[4]	30
220	60	24.0	5 350	30[2,3]	30
230	60	23.5	5 350	30[2,3]	30
240	60	22.5	5 350	30[2,3]	30

[1] For the 200, 208, 220, 230, 240 V units the inrush current is 120 A for up to 1 second during the refrigeration start period. For the 380, 400, 415 V units it is 60 A. Circuit breakers, whether thermal or magnetic actuated, must have a delay type applicable for the start of motors.

[2] Use a 32 A Trip Char. C circuit breaker (D or K are also applicable).

[3] For 380, 400, 415 V, 3-phase (unbalanced load, no neutral used) use a 16 A Trip Char. C circuit breaker (D or K are also applicable).

[4] For North America: use for example GES-9888 30 A.

Table A–4: Mains Supply

4. Water Supply

The following data is to be taken into consideration for the correct water supply.

Water Supply	External thread ¾ inch for hose (external) Internal thread ¾ inch screw for drain (internal)
Water Flow	Minimum: 10 l/min Maximum: < 13 l/min
Water Pressure	Minimum: 2 bar (Outlet without pressure) Maximum: 3 bar* * If the water pressure from the inlet is higher, a pressure regulator must be used. Without a pressure regulator the water flow can be shut down by the water stop.
Water Temperature Inlet	4–18 °C
Maximum Heat Dissipation to Environment	450 kJ/h (room temperature 23 °C) 960 kJ/h (room temperature 15 °C)
Maximum Heat Dissipation to Cooling Water	18 990 kJ/h (room temperature 23 °C)
Maximum Power Output	5 400 W
Water Hardness	1.0698–2.675 mmol/l (6–15 °dH)
ph Value	7–9
Filterable Substances	< 30 mg/l

Table A–5: Water Supply

5. Components

Sorvall BP 8 / 16 Heavy Duty Water Cooled

Article No.	Description	Rotor Capacity	Max. Speed	Max. RCF	Autoclavable (121 °C, 20 min; ✘ = no, ✔ = yes)
75007742	Centri-Log Plus				✘
75007740	Sample Tracking Kit				✘
75007741	Networking Access Kit				✘
75007730	Drain Box (600 x 400 x 50 mm)				✘
MEDICAL					
75003861	**HAEMAFlex 6 Swinging Bucket Rotor**	**6 x 500 ml**			✘
75003881	**HAEMAFlex 8 Swinging Bucket Rotor**	**8 x 550 ml**			✘
75003834	**Oval Single Blood Bag Bucket (set of 2)**		**5000 rpm**	**7127 x g**	✔
75003837	450 – 550 ml Quad or Quint Blood Bag Adapter (set of 2)	6 or 8 x 550 ml			✔
75003838	400 – 450 ml Double or Triple Blood Bag Adapter (set of 2)	6 or 8 x 450 ml			✔
75003839	250 ml Platelet-rich Plasma or Buffy Coat Bag Adapter (set of 2)	6 or 8 x 250 ml			✔
75003841	400 – 450 ml Single or Double Blood Bag Adapter (set of 2)	6 or 8 x 450 ml			✔
75003833	Linerstand for Single Blood Bag Adapters (set of 2)				✘
75003835	**Single Blood Bag Bucket with Filter Pack (set of 2)**		**5000 rpm**	**7211 x g**	✔
75003842	450 – 550 Triple, Quad or Quint Blood Bag with Additive Solution Adapter (set of 2)	6 or 8 x 550 ml			✔
75003859	Filter Holder				✘
75003836	**Single Blood Bag Round Bucket (set of 2)**		**5000 rpm**	**7295 x g**	✔
75003857	450 – 500 ml Triple or Quad Blood Bag Adapter (set of 2)	6 or 8 x 500 ml			✔
75003858	450 ml Single or Double Blood Bag Adapter (set of 2)	6 or 8 x 450 ml			✔
75003862	**HAEMAFlex 12 Swinging Bucket Rotor**	**12 x 500 ml**			✘
75003882	**HAEMAFlex 16 Swinging Bucket Rotor**	**16 x 500 ml**			✘
75003846	**Double Blood Bag Bucket (set of 2)**		**4700 rpm**	**7187 x g**	✔
75003899	Double Quint Blood Bag Adapter for XXL size, HD (set of 2; 110 x 88 mm)	12 or 16 x 500 ml			✔
75003851	Double Quint Blood Bag Adapter for XXL size (set of 2; 110 x 88 mm)	12 or 16 x 500 ml			✔
75003852	Double Quint Blood Bag Adapter for XL size (set of 2; 110 x 76 mm)	12 or 16 x 500 ml			✔

	Article No.	Description	Rotor Capacity	Max. Speed	Max. RCF	Autoclavable (121 °C, 20 min; ✘ = no, ✔ = yes)
	75003853	Double Quint Blood Bag Adapter for M size (set of 2; 110 x 57 mm)	12 or 16 x 450 ml			✔
	75003855	Hook Adapter for Cord Blood Separations, for use with M size Adapters	12 or 16 x 300 ml		1 328 x g	✔
	75003868	Hook Adapter for Cord Blood Separations, for use with XXL size Adapters	12 or 16 x 300 ml		1 328 x g	✔
	75003866	Dummy Weights				✔
	75003832	Linerstand for Double Blood Bag Adapters (set of 2)				✘
IN VITRO	**75003964**	**Oval Bucket (set of 2)**				✔
	75003341	Adapter 52 x 5/7 ml (set of 2)	312 or 416 x 5/7 mL			✔
	75003342	Adapter 42 x 10 ml (set of 2)	252 or 336 x 10 mL			✔
	75003343	Adapter 26 x 15 ml (set of 2)	156 or 208 x 15 mL			✔
	75003344	Adapter 11 x 50 ml (set of 2)	66 or 88 x 50 mL			✔
	75003345	Adapter MP DW (set of 2)	30 MP / 12 DW or 40 MP / 16 DW			✘
	Other components for HAEMAFlex rotors					
	75003843	Blood Bag Spacer (set of 12)				✘
	75006681	Rubber Volume Compensation Plates (set of 12)				✔
	75005759	Rubber Balancing Plates (set of 4)				✔

Table A–6: Components for Sorvall BP 8 / 16 Heavy Duty Water Cooled

B

Rotors

Items Supplied for Rotors

Article No.	Item	Quantity
	Rotor (incl. Windshield Bowl and Windshield Lid)	**1**
75003861	Thermo Scientific HAEMAFlex 6	
75003881	Thermo Scientific HAEMAFlex 8	
75003862	Thermo Scientific HAEMAFlex 12	
75003882	Thermo Scientific HAEMAFlex 16	
20360073	**Rotor Locking Tool**	**1**
75003786	**Bolt Grease**	**1**
70009824	**Corrosion Protection Oil**	**1**
66309	**Cleaning Pad (6x)**	**1**
75009709	**Information Card**	**1**

Table B–1: Items supplied for rotors

HAEMAFlex 6 Rotor

with Single Blood Bag Buckets (oval)

Technical Data

	Sorvall BP 8 Heavy Duty Water Cooled
Centrifuge Voltage	**200, 208, 220, 230, 240 V**
Rotor Capacity	6 x 1000 ml
Maximum Speed n_{max}	5 000 rpm
Maximum RCF-Value at n_{max}	7 127 x g
K-Factor at n_{max}	8 519
Radius max. / min.	255 mm / 110 mm
Angle	90°
Maximum Speed at 4 °C	5 000 rpm
Sample Temperature at Max. Speed (Ambient temperature of 23 °C, run time 90 minutes)	50 Hz: 1 °C 60 Hz: -2 °C
Aerosol-tight	No
Rotor Body Max. Cycle Number	50 000
Buckets Max. Cycle Number[1] at	
7 127 x g / 5 000 rpm	18 500
5 000 x g / 4 188 rpm	35 000
4 000 x g / 3 746 rpm	53 000
2 500 x g / 2 961 rpm	124 000
Weight	19.8 kg
Rotor Body (empty) with Windshield Bowl	18.3 kg
Windshield Lid	1.5 kg

[1] Cycle numbers stated are only valid if the according speed (or rcf) is always set for centrifugation. If different speed (or rcf) settings are used, the smallest cycle number stated is valid.

Table B–2: HAEMAFlex 6 Rotor with Single Blood Bag Buckets (oval)

HAEMAFlex 6 Rotor

with Single Blood Bag Buckets (round)

Technical Data

	Sorvall BP 8 Heavy Duty Water Cooled
Centrifuge Voltage	**200, 208, 220, 230, 240 V**
Rotor Capacity	6 x 1000 ml
Maximum Speed n_{max}	5 000 rpm
Maximum RCF-Value at n_{max}	7 295 x g
K-Factor at n_{max}	8 216
Radius max. / min.	261 mm / 116 mm
Angle	90°
Maximum Speed at 4 °C	5 000 rpm
Sample Temperature at Max. Speed (Ambient temperature of 23 °C, run time 90 minutes)	50 Hz: 1 °C 60 Hz: -2 °C
Aerosol-tight	No
Rotor Body Max. Cycle Number	50 000
Buckets Max. Cycle Number[1] at	
7 295 x g / 5 000 rpm	14 000
5 000 x g / 4 140 rpm	31 000
4 000 x g / 3 703 rpm	50 000
2 500 x g / 2 927 rpm	138 000
Weight	19.8 kg
Rotor Body (empty) with Windshield Bowl	18.3 kg
Windshield Lid	1.5 kg

[1] Cycle numbers stated are only valid if the according speed (or rcf) is always set for centrifugation. If different speed (or rcf) settings are used, the smallest cycle number stated is valid.

Table B–3: HAEMAFlex 6 Rotor with Single Blood Bag Buckets (round)

HAEMAFlex 6 Rotor

with Single Blood Bag Buckets with Filter Pack

Technical Data

	Sorvall BP 8 Heavy Duty Water Cooled
Centrifuge Voltage	**200, 208, 220, 230, 240 V**
Rotor Capacity	6 x 1000 ml
Maximum Speed n_{max}	5 000 rpm
Maximum RCF-Value at n_{max}	7 211 x g
K-Factor at n_{max}	8 365
Radius max. / min.	258 mm / 113 mm
Angle	90°
Maximum Speed at 4 °C	5 000 rpm
Sample Temperature at Max. Speed (Ambient temperature of 23 °C, run time 90 minutes)	50 Hz: 1 °C 60 Hz: -2 °C
Aerosol-tight	No
Rotor Body Max. Cycle Number	50 000
Buckets Max. Cycle Number[1] at	
7 211 x g / 5 000 rpm	14 000
5 000 x g / 4 164 rpm	31 000
4 000 x g / 3 724 rpm	50 000
2 500 x g / 2 944 rpm	138 000
Weight	19.8 kg
Rotor Body (empty) with Windshield Bowl	18.3 kg
Windshield Lid	1.5 kg

[1] Cycle numbers stated are only valid if the according speed (or rcf) is always set for centrifugation. If different speed (or rcf) settings are used, the smallest cycle number stated is valid.

Table B–4: HAEMAFlex 6 Rotor with Single Blood Bag Buckets with Filter Pack

HAEMAFlex 8 Rotor

with Single Blood Bag Buckets (oval)

Technical Data

	Sorvall BP 8 Heavy Duty Water Cooled
Centrifuge Voltage	**200, 208, 220, 230, 240 V**
Rotor Capacity	8 x 1000 ml
Maximum Speed n_{max}	4 600 rpm
Maximum RCF-Value at n_{max}	7 026 x g
K-Factor at n_{max}	8 019
Radius max. / min.	297 mm / 152 mm
Angle	90°
Maximum Speed at 4 °C	4 600 rpm
Sample Temperature at Max. Speed (Ambient temperature of 23 °C, run time 90 minutes)	50 Hz: 4 °C 60 Hz: 2 °C
Aerosol-tight	No
Rotor Body Max. Cycle Number	50 000
Buckets Max. Cycle Number[1] at	
7 026 x g / 4 600 rpm	14 000
5 000 x g / 3 881 rpm	31 000
4 000 x g / 3 471 rpm	50 000
2 500 x g / 2 744 rpm	138 000
Weight	28.8 kg
Rotor Body (empty)	21.9 kg
Windshield Lid	1.9 kg
Windshield Bowl	5.0 kg

[1] Cycle numbers stated are only valid if the according speed (or rcf) is always set for centrifugation. If different speed (or rcf) settings are used, the smallest cycle number stated is valid.

Table B–5: HAEMAFlex 8 Rotor with Single Blood Bag Buckets (oval)

HAEMAFlex 8 Rotor

with Single Blood Bag Buckets (round)

Technical Data

	Sorvall BP 8 Heavy Duty Water Cooled
Centrifuge Voltage	**200, 208, 220, 230, 240 V**
Rotor Capacity	8 x 1000 ml
Maximum Speed n_{max}	4 600 rpm
Maximum RCF-Value at n_{max}	7 144 x g
K-Factor at n_{max}	7 831
Radius max. / min.	302 mm / 157 mm
Angle	90°
Maximum Speed at 4 °C	4 600 rpm
Sample Temperature at Max. Speed (Ambient temperature of 23 °C, run time 90 minutes)	50 Hz: 4 °C 60 Hz: 2 °C
Aerosol-tight	No
Rotor Body Max. Cycle Number	50 000
Buckets Max. Cycle Number[1] at	
7 144 x g / 4 600 rpm	14 500
5 000 x g / 3 848 rpm	31 000
4 000 x g / 3 442 rpm	50 000
2 500 x g / 2 721 rpm	138 000
Weight	28.8 kg
Rotor Body (empty)	21.9 kg
Windshield Lid	1.9 kg
Windshield Bowl	5.0 kg

[1] Cycle numbers stated are only valid if the according speed (or rcf) is always set for centrifugation. If different speed (or rcf) settings are used, the smallest cycle number stated is valid.

Table B–6: HAEMAFlex 8 Rotor with Single Blood Bag Buckets (round)

HAEMAFlex 8 Rotor

with Single Blood Bag Buckets with Filter Pack

Technical Data

	Sorvall BP 8 Heavy Duty Water Cooled
Centrifuge Voltage	**200, 208, 220, 230, 240 V**
Rotor Capacity	8 x 1000 ml
Maximum Speed n_{max}	4 600 rpm
Maximum RCF-Value at n_{max}	7 073 x g
K-Factor at n_{max}	7 942
Radius max. / min.	299 mm / 154 mm
Angle	90°
Maximum Speed at 4 °C	4 600 rpm
Sample Temperature at Max. Speed (Ambient temperature of 23 °C, run time 90 minutes)	50 Hz: 4 °C 60 Hz: 2 °C
Aerosol-tight	No
Rotor Body Max. Cycle Number	50 000
Buckets Max. Cycle Number[1] at	
7 073 x g / 4 600 rpm	14 000
5 000 x g / 3 868 rpm	31 000
4 000 x g / 3 459 rpm	50 000
2 500 x g / 2 735 rpm	138 000
Weight	28.8 kg
Rotor Body (empty)	21.9 kg
Windshield Lid	1.9 kg
Windshield Bowl	5.0 kg

[1] Cycle numbers stated are only valid if the according speed (or rcf) is always set for centrifugation. If different speed (or rcf) settings are used, the smallest cycle number stated is valid.

Table B–7: HAEMAFlex 8 Rotor with Single Blood Bag Buckets with Filter Pack

HAEMAFlex 12 Rotor

with Double Blood Bag Buckets

Technical Data

	Sorvall BP 16 Heavy Duty Water Cooled
Centrifuge Voltage	**200, 208, 220, 230, 240 V**
Rotor Capacity	12 x 1000 ml
Maximum Speed n_{max}	4 700 rpm
Maximum RCF-Value at n_{max}	7 187 x g
K-Factor at n_{max}	7 909
Radius max. / min.	291 mm / 146 mm
Angle	90°
Maximum Speed at 4 °C	4 600 rpm
Sample Temperature at Max. Speed (Ambient temperature of 23 °C, run time 90 minutes)	50 Hz: 5 °C 60 Hz: 2 °C
Aerosol-tight	No
Rotor Body Max. Cycle Number	50 000
Buckets Max. Cycle Number[1] at	
7187 x g / 4700 rpm	14 000
5000 x g / 3921 rpm	31 000
4000 x g / 3507 rpm	50 000
2500 x g / 2772 rpm	137 000
Weight	25.6 kg
Rotor Body (empty)	18.5 kg
Windshield Lid	1.7 kg
Windshield Bowl	5.4 kg

[1] Cycle numbers stated are only valid if the according speed (or rcf) is always set for centrifugation. If different speed (or rcf) settings are used, the smallest cycle number stated is valid.

Table B–8: HAEMAFlex 12 Rotor with Double Blood Bag Buckets

HAEMAFlex 12 Rotor

with Oval Buckets

Technical Data

	Sorvall BP 16 / Sorvall BP 16 Heavy Duty / Sorvall BIOS 16 / Sorvall BIOS 16 Heavy Duty	
Centrifuge Voltage	**200, 208, 220, 230, 240 V**	**380, 400, 415 V**
Rotor Capacity	6 x 2000 ml	6 x 2000 ml
Maximum Speed n_{max}	4 700 rpm	4 700 rpm
Maximum RCF-Value at n_{max}	7 187 x g	7 187 x g
K-Factor at n_{max}	7 909	7 909
Radius max. / min.	291 mm / 146 mm	291 mm / 146 mm
Angle	90°	90°
Maximum Speed at 4 °C	4 600 rpm	4 600 rpm
Sample Temperature at Max. Speed (Ambient temperature of 23 °C, run time 90 minutes)	50 Hz: 5 °C 60 Hz: 2 °C	50 Hz: 5 °C 60 Hz: 2 °C
Aerosol-tight	No	No
Rotor Body Max. Cycle Number	50 000	
Buckets Max. Cycle Number[1] at		
7187 x g / 4700 rpm	16 000	
5000 x g / 3921 rpm	35000	
4000 x g / 3507 rpm	56 000	
2500 x g / 2772 rpm	152 000	
Weight	25.6 kg	
Rotor Body (empty)	18.5 kg	
Windshield Lid	1.7 kg	
Windshield Bowl	5.4 kg	

[1] Cycle numbers stated are only valid if the according speed (or rcf) is always set for centrifugation. If different speed (or rcf) settings are used, the smallest cycle number stated is valid.

Table B–9: HAEMAFlex 12 Rotor with Oval Buckets

HAEMAFlex 16 Rotor

with Double Blood Bag Buckets

Technical Data

	Sorvall BP 16 Heavy Duty Water Cooled
Centrifuge Voltage	**200, 208, 220, 230, 240 V**
Rotor Capacity	16 x 1000 ml
Maximum Speed n_{max}	3900 rpm
Maximum RCF-Value at n_{max}	5374 x g
K-Factor at n_{max}	10227
Radius max. / min.	316 mm / 171 mm
Angle	90°
Maximum Speed at 4 °C	3900 rpm
Sample Temperature at Max. Speed (Ambient temperature of 23 °C, run time 90 minutes)	50 Hz: 0 °C 60 Hz: -2 °C
Aerosol-tight	No
Rotor Body Max. Cycle Number	50000
Buckets Max. Cycle Number[1] at	
5374 x g / 3900 rpm	26500
5000 x g / 3762 rpm	31000
4000 x g / 3365 rpm	50000
2500 x g / 2660 rpm	137000
Weight	32.1 kg
Rotor Body (empty)	24.7 kg
Windshield Lid	1.9 kg
Windshield Bowl	5.5 kg

[1] Cycle numbers stated are only valid if the according speed (or rcf) is always set for centrifugation. If different speed (or rcf) settings are used, the smallest cycle number stated is valid.

Table B–10: HAEMAFlex 16 Rotor with Double Blood Bag Buckets

HAEMAFlex 16 Rotor

with Oval Buckets

Technical Data

	Sorvall BP 16 / Sorvall BP 16 Heavy Duty / Sorvall BIOS 16 / Sorvall BIOS 16 Heavy Duty	
Centrifuge Voltage	**200, 208, 220, 230, 240 V**	**380, 400, 415 V**
Rotor Capacity	8 x 2000 ml	8 x 2000 ml
Maximum Speed n_{max}	3 900 rpm	3 900 rpm
Maximum RCF-Value at n_{max}	5 374 x g	5 374 x g
K-Factor at n_{max}	10 227	10 227
Radius max. / min.	316 mm / 171 mm	316 mm / 171 mm
Angle	90°	90°
Maximum Speed at 4 °C	3 900 rpm	3 900 rpm
Sample Temperature at Max. Speed (Ambient temperature of 23 °C, run time 90 minutes)	50 Hz: 0 °C 60 Hz: -2 °C	50 Hz: 0 °C 60 Hz: -2 °C
Aerosol-tight	No	No
Rotor Body Max. Cycle Number	50 000	
Buckets Max. Cycle Number[1] at		
5374 x g / 3900 rpm	30 000	
5000 x g / 3762 rpm	35 000	
4000 x g / 3365 rpm	56 000	
2500 x g / 2660 rpm	152 000	
Weight	32.1 kg	
Rotor Body (empty)	24.7 kg	
Windshield Lid	1.9 kg	
Windshield Bowl	5.5 kg	

[1] Cycle numbers stated are only valid if the according speed (or rcf) is always set for centrifugation. If different speed (or rcf) settings are used, the smallest cycle number stated is valid.

Table B–11: HAEMAFlex 16 Rotor with Oval Buckets

Chemical Compatibility Chart

CHEMICAL / MATERIAL	Alluminum	Anodic Coating for Alluminum	Buna N	Cellulose Acetate Butyrate	Polyurethane Rotor Paint	Composite Carbon Fiber/Epoxy	Delrin™	Ethylene Propylene	Glass	Neoprene	Noryl™	Nylon	PET, Polyclear™, Clear Crimp™	Polyallomer	Polycarbonate	Polyester, Glass Thermoset	Polythermide	Polyethylene	Polypropylene	Polysulfone	Polyvinil Chloride	Rulon A™, Teflon™	Silicone Rubber	Stainless Steel	Titanium	Tygon™	Viton™
2-mercaptoethanol	S	S	U	/	S	M	S	/	S	U	S	S	U	S	S	/	S	S	S	S	U	S	S	S	S	S	S
Acetaldehyde	S	/	U	U	/	/	/	M	/	U	/	/	/	M	U	U	U	M	M	/	M	S	U	/	S	/	U
Acetone	M	S	U	U	S	U	M	S	S	U	U	S	U	S	U	U	U	S	S	U	U	S	M	M	S	U	U
Acetonitrile	S	S	U	/	S	M	S	/	S	S	U	S	U	M	U	U	/	S	M	U	U	S	S	S	S	U	U
Alconox™	U	U	S	/	S	S	S	/	S	S	S	S	S	S	M	S	S	S	S	S	S	S	S	S	S	S	U
Allyl Alcohol	/	/	/	U	/	/	S	/	/	/	/	S	/	S	S	M	S	S	S	/	M	S	/	/	S	/	/
Aluminum Chloride	U	U	S	S	S	S	U	S	S	S	S	M	S	S	S	S	/	S	S	S	S	S	M	U	U	S	S
Formic Acid (100%)	/	S	M	U	/	/	U	/	/	/	/	U	/	S	M	U	U	S	S	/	U	S	/	U	S	/	U
Ammonium Acetate	S	S	U	/	S	S	S	/	S	S	S	S	S	S	S	U	/	S	S	S	S	S	S	S	S	S	S
Ammonium Carbonate	M	S	U	S	S	S	S	S	S	S	S	S	S	S	U	U	/	S	S	S	S	S	S	M	S	S	S
Ammonium Hydroxide (10%)	U	U	S	U	S	S	M	S	S	S	S	S	/	S	U	M	S	S	S	S	S	S	S	S	S	M	S
Ammonium Hydroxide (28%)	U	U	S	U	S	U	M	S	S	S	S	S	U	S	U	M	S	S	S	S	S	S	S	S	S	M	S
Ammonium Hydroxide (conc.)	U	U	U	U	S	U	M	S	/	S	/	S	U	S	U	U	S	S	S	/	M	S	S	S	S	/	U
Ammonium Phosphate	U	/	S	/	S	S	S	S	S	S	S	S	/	S	S	M	/	S	S	S	S	S	S	M	S	S	S
Ammonium Sulfate	U	M	S	/	S	S	U	S	S	S	S	S	S	S	S	S	/	S	S	S	S	S	S	U	S	S	U

S	Satisfactory
M	Moderate attack, may be satisfactory for use in centrifuge depending on length of exposure, speed involved, etc.; suggest testing under actual conditions of use
U	Unsatisfactory, not recommended
/	Performance unknown; suggest testing, using sample to avoid loss of valuable material

Chemical Compatibility Chart

CHEMICAL / MATERIAL	Alluminum	Anodic Coating for Alluminum	Buna N	Cellulose Acetate Butyrate	Polyurethane Rotor Paint	Composite Carbon Fiber/Epoxy	Delrin™	Ethylene Propylene	Glass	Neoprene	Noryl™	Nylon	PET, Polyclear™, Clear Crimp™	Polyallomer	Polycarbonate	Polyester, Glass Thermoset	Polythermide	Polyethylene	Polypropylene	Polysulfone	Polyvinil Chloride	Rulon A™, Teflon™	Silicone Rubber	Stainless Steel	Titanium	Tygon™	Viton™
Amyl Alcohol	S	/	M	U	/	/	S	S	/	M	/	S	/	M	S	S	S	S	M	/	/	/	U	/	S	/	M
Aniline	S	S	U	U	S	U	S	M	S	U	U	U	U	U	U	U	/	S	M	U	U	S	S	S	S	U	S
Sodium Hydroxide (<1%)	U	/	M	S	S	S	/	/	S	M	S	S	/	S	M	M	S	S	S	S	S	S	M	S	S	/	U
Sodium Hydroxide (10%)	U	/	M	U	/	/	U	/	M	M	S	S	U	S	U	U	S	S	S	S	S	S	M	S	S	/	U
Barium Salts	M	U	S	/	S	S	S	S	S	S	S	S	S	S	S	M	/	S	S	S	S	S	S	M	S	S	S
Benzene	S	S	U	U	S	U	M	U	S	U	U	S	U	U	U	M	U	M	U	U	U	S	U	U	S	U	S
Benzyl Alcohol	S	/	U	U	/	/	M	M	/	M	/	S	U	U	U	U	U	U	U	/	M	S	M	/	S	/	S
Boric Acid	U	S	S	M	S	S	U	S	S	S	S	S	S	S	S	S	U	S	S	S	S	S	S	S	S	S	S
Cesium Acetate	M	/	S	/	S	S	S	/	S	S	S	S	/	S	S	/	/	S	S	S	S	S	S	M	S	S	S
Cesium Bromide	M	S	S	/	S	S	S	/	S	S	S	S	S	S	S	/	/	S	S	S	S	S	S	M	S	S	S
Cesium Chloride	M	S	S	U	S	S	S	/	S	S	S	S	S	S	S	/	/	S	S	S	S	S	S	M	S	S	S
Cesium Formate	M	S	S	/	S	S	S	/	S	S	S	S	S	S	S	/	/	S	S	S	S	S	S	M	S	S	S
Cesium Iodide	M	S	S	/	S	S	S	/	S	S	S	S	S	S	S	/	/	S	S	S	S	S	S	M	S	S	S
Cesium Sulfate	M	S	S	/	S	S	S	/	S	S	S	S	S	S	S	/	/	S	S	S	S	S	S	M	S	S	S
Chloroform	U	U	U	U	S	S	M	U	S	U	U	M	U	M	U	U	U	M	M	U	U	S	U	U	U	M	S

S	Satisfactory
M	Moderate attack, may be satisfactory for use in centrifuge depending on length of exposure, speed involved, etc.; suggest testing under actual conditions of use
U	Unsatisfactory, not recommended
/	Performance unknown; suggest testing, using sample to avoid loss of valuable material

Chemical Compatibility Chart

CHEMICAL / MATERIAL	Alluminum	Anodic Coating for Alluminum	Buna N	Cellulose Acetate Butyrate	Polyurethane Rotor Paint	Composite Carbon Fiber/Epoxy	Delrin™	Ethylene Propylene	Glass	Neoprene	Noryl™	Nylon	PET, Polyclear™, Clear Crimp™	Polyallomer	Polycarbonate	Polyester, Glass Thermoset	Polythermide	Polyethylene	Polypropylene	Polysulfone	Polyvinil Chloride	Rulon A™, Teflon™	Silicone Rubber	Stainless Steel	Titanium	Tygon™	Viton™
Chromic Acid (10%)	U	/	U	U	S	U	U	/	S	S	S	U	S	S	M	U	M	S	S	U	M	S	M	U	S	S	S
Chromic Acid (50%)	U	/	U	U	/	U	U	/	/	/	S	U	U	S	M	U	M	S	S	U	M	S	/	U	M	/	S
Cresol Mixture	S	S	U	/	/	/	S	/	S	U	U	U	U	U	U	/	/	U	U	/	U	S	S	S	S	U	S
Cyclohexane	S	S	S	/	S	S	S	U	S	U	S	S	U	U	U	M	S	M	U	M	M	S	U	M	M	U	S
Deoxycholate	S	S	S	/	S	S	S	/	S	S	S	S	S	S	S	/	/	S	S	S	S	S	S	S	S	S	S
Distilled Water	S	S	S	S	S	S	S	S	S	S	S	S	S	S	S	S	S	S	S	S	S	S	S	S	S	S	S
Dextran	M	S	S	S	S	S	S	/	S	S	S	S	S	S	S	S	S	S	S	S	S	S	S	M	S	S	S
Diethyl Ether	S	S	U	U	S	S	S	U	S	U	U	S	U	U	U	U	U	U	U	U	U	S	S	S	S	M	U
Diethyl Ketone	S	/	U	U	/	/	M	/	S	U	/	S	/	M	U	U	U	M	M	/	U	S	/	/	S	U	U
Diethylpyro-carbonate	S	S	U	/	S	S	S	/	S	S	U	S	U	S	U	/	/	S	S	S	M	S	S	S	S	S	S
Dimethylsulfoxide	S	S	U	U	S	S	S	/	S	U	S	S	U	S	U	U	/	S	S	U	U	S	S	S	S	U	U
Dioxane	M	S	U	U	S	S	M	M	S	U	U	S	U	M	U	U	/	M	M	M	U	S	S	S	S	U	U
Ferric Chloride	U	U	S	/	/	/	M	S	/	M	/	S	/	S	/	/	/	S	S	/	/	/	M	U	S	/	S
Acetic Acid (Glacial)	S	S	U	U	S	S	U	M	S	U	S	U	U	U	U	U	M	S	U	M	U	S	U	U	S	/	U
Acetic Acid (5%)	S	S	M	S	S	S	M	S	S	S	S	S	M	S	S	S	S	S	S	S	M	S	S	M	S	S	M

S	Satisfactory
M	Moderate attack, may be satisfactory for use in centrifuge depending on length of exposure, speed involved, etc.; suggest testing under actual conditions of use
U	Unsatisfactory, not recommended
/	Performance unknown; suggest testing, using sample to avoid loss of valuable material

Chemical Compatibility Chart

CHEMICAL / MATERIAL	Alluminum	Anodic Coating for Alluminum	Buna N	Cellulose Acetate Butyrate	Polyurethane Rotor Paint	Composite Carbon Fiber/Epoxy	Delrin™	Ethylene Propylene	Glass	Neoprene	Noryl™	Nylon	PET[1], Polyclear™, Clear Crimp™	Polyallomer	Polycarbonate	Polyester, Glass Thermoset	Polythermide	Polyethylene	Polypropylene	Polysulfone	Polyvinil Chloride	Rulon A™, Teflon™	Silicone Rubber	Stainless Steel	Titanium	Tygon™	Viton™
Acetic Acid (60%)	S	S	U	U	S	S	U	/	S	M	S	U	U	M	U	S	M	S	M	S	M	S	M	U	S	M	U
Ethyl Acetate	M	M	U	U	S	S	M	M	S	S	U	S	U	M	U	U	/	S	S	U	U	S	M	M	S	U	U
Ethyl Alcohol (50%)	S	S	S	S	S	S	M	S	S	S	S	S	U	S	U	S	S	S	S	S	S	S	S	M	S	M	U
Ethyl Alcohol (95%)	S	S	S	U	S	S	M	S	S	S	S	S	U	S	U	/	S	S	S	M	S	S	S	U	S	M	U
Ethylene Dichloride	S	/	U	U	/	/	S	M	/	U	U	S	U	U	U	U	U	U	U	/	U	S	U	/	S	/	S
Ethylene Glycol	S	S	S	S	S	S	S	S	S	S	S	S	/	S	U	S	S	S	S	S	S	S	S	M	S	M	S
Ethylene Oxide Vapor	S	/	U	/	/	U	/	/	S	U	/	S	/	S	M	/	/	S	S	S	U	S	U	S	S	S	U
Ficoll-Hypaque™	M	S	S	/	S	S	S	/	S	S	S	S	/	S	S	/	S	S	S	S	S	S	S	M	S	S	S
Hydrofluoric Acid (10%)	U	U	U	M	/	/	U	/	/	U	U	S	/	S	M	U	S	S	S	S	M	S	U	U	U	/	/
Hydrofluoric Acid (50%)	U	U	U	U	/	/	U	/	/	U	U	U	U	S	U	U	U	S	S	M	M	S	U	U	U	/	M
Hydrochloric Acid (conc.)	U	U	U	U	/	U	U	M	/	U	M	U	U	M	U	U	U	/	S	/	U	S	U	U	U	/	/
Formaldehyde (40%)	M	M	M	S	S	S	S	M	S	S	S	S	M	S	S	S	U	S	S	M	S	S	S	M	S	M	U
Glutaraldehyde	S	S	S	S	/	/	S	/	S	S	S	S	S	S	S	/	/	S	S	S	/	/	S	S	S	/	/
Glycerol	M	S	S	/	S	S	S	S	S	S	S	S	S	S	S	S	/	S	S	S	S	S	S	S	S	S	S
Guanidine Hydrochloride	U	U	S	/	S	S	S	/	S	S	S	S	S	S	S	/	/	S	S	S	S	S	S	U	S	S	S

S	Satisfactory
M	Moderate attack, may be satisfactory for use in centrifuge depending on length of exposure, speed involved, etc.; suggest testing under actual conditions of use
U	Unsatisfactory, not recommended
/	Performance unknown; suggest testing, using sample to avoid loss of valuable material

Chemical Compatibility Chart

CHEMICAL / MATERIAL	Alluminum	Anodic Coating for Aluminum	Buna N	Cellulose Acetate Butyrate	Polyurethane Rotor Paint	Composite Carbon Fiber/Epoxy	Delrin™	Ethylene Propylene	Glass	Neoprene	Noryl™	Nylon	PET[1], Polyclear™, Clear Crimp™	Polyallomer	Polycarbonate	Polyester, Glass Thermoset	Polythermide	Polyethylene	Polypropylene	Polysulfone	Polyvinil Chloride	Rulon A™, Teflon™	Silicone Rubber	Stainless Steel	Titanium	Tygon™	Viton™
Haemo-Sol™	S	S	S	/	/	/	S	/	S	S	S	S	S	S	S	/	/	S	S	S	S	S	S	S	S	S	S
Hexane	S	S	S	/	S	S	S	/	S	S	U	S	U	M	U	S	S	U	S	S	M	S	U	S	S	U	S
Isobutyl Alcohol	/	/	M	U	/	/	S	S	/	U	/	S	U	S	S	M	S	S	S	/	S	S	S	/	S	/	S
Isopropyl Alcohol	M	M	M	U	S	S	S	S	S	U	S	S	U	S	U	M	S	S	S	S	S	S	S	M	M	M	S
Iodoacetic Acid	S	S	M	/	S	S	S	/	S	M	S	S	M	S	S	/	M	S	S	S	S	S	M	S	S	M	M
Potassium Bromide	U	S	S	/	S	S	S	/	S	S	S	S	S	S	S	S	S	S	S	/	S	S	S	M	S	S	S
Potassium Carbonate	M	U	S	S	S	S	S	/	S	S	S	S	S	S	U	S	S	S	S	S	S	S	S	S	S	S	S
Potassium Chloride	U	S	S	/	S	S	S	S	S	S	S	S	S	S	S	/	S	S	S	S	S	S	S	U	S	S	S
Potassium Hydroxide (5%)	U	U	S	S	S	S	M	/	S	S	S	S	/	S	U	S	S	S	S	S	S	S	M	U	M	S	U
Potassium Hydroxide (conc.)	U	U	M	U	/	/	M	/	M	S	S	/	U	M	U	U	U	S	M	/	M	U	/	U	U	/	U
Potassium Permanganate	S	S	S	/	S	S	S	/	S	S	S	U	S	S	S	M	/	S	M	S	U	S	S	M	S	U	S
Calcium Chloride	M	U	S	S	S	S	S	S	S	S	S	S	S	S	M	S	/	S	S	S	S	S	S	M	S	S	S
Calcium Hypochlorite	M	/	U	/	S	M	M	S	/	M	/	S	/	S	M	S	/	S	S	S	M	S	M	U	S	/	S
Kerosene	S	S	S	/	S	S	S	U	S	M	U	S	U	M	M	S	/	M	M	M	S	S	U	S	S	U	S
Sodium Chloride (10%)	S	/	S	S	S	S	S	S	/	/	/	S	S	S	S	S	/	S	S	S	S	/	S	S	M	/	S

S	Satisfactory
M	Moderate attack, may be satisfactory for use in centrifuge depending on length of exposure, speed involved, etc.; suggest testing under actual conditions of use
U	Unsatisfactory, not recommended
/	Performance unknown; suggest testing, using sample to avoid loss of valuable material

Chemical Compatibility Chart

CHEMICAL / MATERIAL	Alluminum	Anodic Coating for Aluminum	Buna N	Cellulose Acetate Butyrate	Polyurethane Rotor Paint	Composite Carbon Fiber/Epoxy	Delrin™	Ethylene Propylene	Glass	Neoprene	Noryl™	Nylon	PET[1], Polyclear™, Clear Crimp™	Polyallomer	Polycarbonate	Polyester, Glass Thermoset	Polythermide	Polyethylene	Polypropylene	Polysulfone	Polyvinil Chloride	Rulon A™, Teflon™	Silicone Rubber	Stainless Steel	Titanium	Tygon™	Viton™
Sodium Chloride (sat'd)	U	/	S	U	S	S	S	/	/	/	/	S	S	S	S	S	/	S	S	/	S	/	S	S	M	/	S
Carbon Tetrachloride	U	U	M	S	S	U	M	U	S	U	U	S	U	M	U	S	S	M	M	S	M	M	M	M	U	S	S
Aqua Regia	U	/	U	U	/	/	U	/	/	/	/	/	U	U	U	U	U	U	U	/	/	/	/	/	S	/	M
Solution 555 (20%)	S	S	S	/	/	/	S	/	S	S	S	S	S	S	S	/	/	S	S	S	/	S	S	S	S	S	S
Magnesium Chloride	M	S	S	/	S	S	S	S	S	S	S	S	S	S	S	S	S	S	S	S	S	S	S	M	S	S	S
Mercaptoacetic Acid	U	S	U	/	S	M	S	/	S	M	S	U	U	U	U	/	S	U	U	S	M	S	U	S	S	S	S
Methyl Alcohol	S	S	S	U	S	S	M	S	S	S	S	S	U	S	U	M	S	S	S	S	S	S	S	M	S	M	U
Methylene Chloride	U	U	U	U	M	S	S	U	S	U	U	S	U	U	U	U	U	M	U	U	U	S	S	M	U	S	U
Methyl Ethyl Ketone	S	S	U	U	S	S	M	S	S	U	U	S	U	S	U	U	U	S	S	U	U	S	S	S	S	U	U
Metrizamide™	M	S	S	/	S	S	S	/	S	S	S	S	/	S	S	/	/	S	S	S	S	S	S	M	S	S	S
Lactic Acid (100%)	/	/	S	/	/	/	/	/	/	M	S	U	/	S	S	S	M	S	S	/	M	S	M	S	S	/	S
Lactic Acid (20%)	/	/	S	S	/	/	/	/	/	M	S	M	/	S	S	S	S	S	S	S	M	S	M	S	S	/	S
N/Butyl Alcohol	S	/	S	U	/	/	S	/	/	S	M	/	U	S	M	S	S	S	S	M	M	S	M	/	S	/	S
N/Butyl Phthalate	S	S	U	/	S	S	S	/	S	U	U	S	U	U	U	M	/	U	U	S	U	S	M	M	S	U	S
N, N-Dimethylformamide	S	S	S	U	S	M	S	/	S	S	U	S	U	S	U	U	/	S	S	U	U	S	M	S	S	S	U

S	Satisfactory
M	Moderate attack, may be satisfactory for use in centrifuge depending on length of exposure, speed involved, etc.; suggest testing under actual conditions of use
U	Unsatisfactory, not recommended
/	Performance unknown; suggest testing, using sample to avoid loss of valuable material

Chemical Compatibility Chart

CHEMICAL \ MATERIAL	Alluminum	Anodic Coating for Aluminum	Buna N	Cellulose Acetate Butyrate	Polyurethane Rotor Paint	Composite Carbon Fiber/Epoxy	Delrin™	Ethylene Propylene	Glass	Neoprene	Noryl™	Nylon	PET[1], Polyclear™, Clear Crimp™	Polyallomer	Polycarbonate	Polyester, Glass Thermoset	Polythermide	Polyethylene	Polypropylene	Polysulfone	Polyvinil Chloride	Rulon A™, Teflon™	Silicone Rubber	Stainless Steel	Titanium	Tygon™	Viton™
Sodium Borate	M	S	S	S	S	S	S	S	S	S	S	U	S	S	S	S	/	S	S	S	S	S	S	M	S	S	S
Sodium Bromide	U	S	S	/	S	S	S	/	S	S	S	S	S	S	S	S	/	S	S	S	S	S	S	M	S	S	S
Sodium Carbonate (2%)	M	U	S	S	S	S	S	S	S	S	S	S	S	S	U	S	S	S	S	S	S	S	S	S	S	S	S
Sodium Dodecyl Sulfate	S	S	S	/	S	S	S	/	S	S	S	S	S	S	S	/	S	S	S	S	S	S	S	S	S	S	S
Sodium Hypochlorite (5%)	U	U	M	S	S	M	U	S	S	M	S	S	S	M	S	S	S	S	M	S	S	S	M	U	S	M	S
Sodium Iodide	M	S	S	/	S	S	S	/	S	S	S	S	S	S	S	/	/	S	S	S	S	S	S	M	S	S	S
Sodium Nitrate	S	S	S	/	S	S	S	S	S	S	S	S	S	S	S	S	/	S	S	S	S	S	U	S	S	S	S
Sodium Sulfate	U	S	S	/	S	S	S	S	S	S	S	S	S	S	S	S	S	S	S	S	S	S	S	M	S	S	S
Sodium Sulfide	S	/	S	S	/	/	/	S	/	/	/	S	S	S	U	U	/	/	S	/	/	/	S	S	M	/	S
Sodium Sulfite	S	S	S	/	S	S	S	S	M	S	S	S	S	S	S	M	/	S	S	S	S	S	S	S	S	S	S
Nickel Salts	U	S	S	S	S	S	/	S	S	S	/	/	S	S	S	S	/	S	S	S	S	S	S	M	S	S	S
Oils (Petroleum)	S	S	S	/	/	/	S	U	S	S	S	S	U	U	M	S	M	U	U	S	S	S	U	S	S	S	S
Oils (Other)	S	/	S	/	/	/	S	M	S	S	S	S	U	S	S	S	S	U	S	S	S	S	/	S	S	M	S
Oleic Acid	S	/	U	S	S	S	U	U	S	U	S	S	M	S	S	S	S	S	S	S	S	S	M	U	S	M	M
Oxalic Acid	U	U	M	S	S	S	U	S	S	S	S	S	U	S	U	S	S	S	S	S	S	S	S	U	M	S	S

S	Satisfactory
M	Moderate attack, may be satisfactory for use in centrifuge depending on length of exposure, speed involved, etc.; suggest testing under actual conditions of use
U	Unsatisfactory, not recommended
/	Performance unknown; suggest testing, using sample to avoid loss of valuable material

Chemical Compatibility Chart

CHEMICAL / MATERIAL	Alluminum	Anodic Coating for Alluminum	Buna N	Cellulose Acetate Butyrate	Polyurethane Rotor Paint	Composite Carbon Fiber/Epoxy	Delrin™	Ethylene Propylene	Glass	Neoprene	Noryl™	Nylon	PET, Polyclear™, Clear Crimp™	Polyallomer	Polycarbonate	Polyester, Glass Thermoset	Polythermide	Polyethylene	Polypropylene	Polysulfone	Polyvinil Chloride	Rulon A™, Teflon™	Silicone Rubber	Stainless Steel	Titanium	Tygon™	Viton™
Perchloric Acid (10%)	U	/	U	/	S	U	U	/	S	M	M	/	/	M	U	M	S	M	M	/	M	S	U	/	S	/	S
Perchloric Acid (70%)	U	U	U	/	/	U	U	/	S	U	M	U	U	M	U	U	U	M	M	U	M	S	U	U	S	U	S
Phenol (5%)	U	S	U	/	S	M	M	/	S	U	M	U	U	S	U	M	S	M	S	U	U	S	U	M	M	M	S
Phenol (50%)	U	S	U	/	S	U	M	/	S	U	M	U	U	U	U	U	S	U	M	U	U	S	U	U	U	M	S
Phosphoric Acid (10%)	U	U	M	S	S	S	U	S	S	S	S	U	/	S	S	S	S	S	S	S	S	S	U	M	U	S	S
Phosphoric Acid (conc.)	U	U	M	M	/	/	U	S	/	M	S	U	U	M	M	S	S	S	M	S	M	S	U	M	U	/	S
Physologic Media (Serum, Urine)	M	S	S	S	/	/	S	/	S	S	S	S	S	S	S	S	S	S	S	S	S	S	S	S	S	S	S
Picric Acid	S	S	U	/	S	M	S	S	S	M	S	U	S	S	S	U	S	S	S	S	U	S	U	M	S	M	S
Pyridine (50%)	U	S	U	U	S	U	U	/	U	S	S	U	U	M	U	U	/	U	S	M	U	S	S	U	U	U	U
Rubidium Bromide	M	S	S	/	S	S	S	/	S	S	S	S	S	S	S	/	/	S	S	S	S	S	S	M	S	S	S
Rubidium Chloride	M	S	S	/	S	S	S	/	S	S	S	S	S	S	S	/	/	S	S	S	S	S	S	M	S	S	S
Sucrose	M	S	S	/	S	S	S	S	S	S	S	S	S	S	S	S	S	S	S	S	S	S	S	S	S	S	S
Sucrose, Alkaline	M	S	S	/	S	S	S	/	S	S	S	S	S	S	U	S	S	S	S	S	S	S	S	M	S	S	S
Sulfosalicylic Acid	U	U	S	S	S	S	S	/	S	S	S	U	S	S	S	/	S	S	S	/	S	S	S	U	S	S	S
Nitric Acid (10%)	U	S	U	S	S	U	U	/	S	U	S	U	/	S	S	S	S	S	S	S	S	S	M	S	S	S	S

S	Satisfactory
M	Moderate attack, may be satisfactory for use in centrifuge depending on length of exposure, speed involved, etc.; suggest testing under actual conditions of use
U	Unsatisfactory, not recommended
/	Performance unknown; suggest testing, using sample to avoid loss of valuable material

Chemical Compatibility Chart

CHEMICAL \ MATERIAL	Alluminum	Anodic Coating for Alluminum	Buna N	Cellulose Acetate Butyrate	Polyurethane Rotor Paint	Composite Carbon Fiber/Epoxy	Delrin™	Ethylene Propylene	Glass	Neoprene	Noryl™	Nylon	PET, Polyclear™, Clear Crimp™	Polyallomer	Polycarbonate	Polyester, Glass Thermoset	Polythermide	Polyethylene	Polypropylene	Polysulfone	Polyvinil Chloride	Rulon A™, Teflon™	Silicone Rubber	Stainless Steel	Titanium	Tygon™	Viton™
Nitric Acid (50%)	U	S	U	M	S	U	U	/	S	U	S	U	U	M	M	U	M	M	M	S	S	S	U	S	S	M	S
Nitric Acid (95%)	U	/	U	U	/	U	U	/	/	U	U	U	U	M	U	U	U	U	M	U	U	S	U	S	S	/	S
Hydrochloric Acid (10%)	U	U	M	S	S	S	U	/	S	S	S	U	U	S	U	S	S	S	S	S	S	S	S	U	M	S	S
Hydrochloric Acid (50%)	U	U	U	U	S	U	U	/	S	M	S	U	U	M	U	U	S	S	S	S	M	S	M	U	U	M	M
Sulfuric Acid (10%)	M	U	U	S	S	U	U	/	S	S	M	U	S	S	S	S	S	S	S	S	S	S	U	U	U	S	S
Sulfuric Acid (50%)	M	U	U	U	S	U	U	/	S	S	M	U	U	S	U	U	M	S	S	S	S	S	U	U	U	M	S
Sulfuric Acid (conc.)	M	U	U	U	/	U	U	M	/	/	M	U	U	S	U	U	U	M	S	U	M	S	U	U	U	/	S
Stearic Acid	S	/	S	/	/	/	S	M	S	S	S	S	/	S	S	S	S	S	S	S	S	S	M	M	S	S	S
Tetrahydrofuran	S	S	U	U	S	U	U	M	S	U	U	S	U	U	U	/	M	U	U	U	U	S	U	S	S	U	U
Toluene	S	S	U	U	S	S	M	U	S	U	U	S	U	U	U	S	U	M	U	U	U	S	U	S	U	U	M
Trichloroacetic Acid	U	U	U	/	S	S	U	M	S	U	S	U	U	S	M	/	M	S	S	U	U	S	U	U	U	M	U
Trichloroethane	S	/	U	/	/	/	M	U	/	U	/	S	U	U	U	U	U	U	U	U	U	S	U	/	S	/	S
Trichloroethylene	/	/	U	U	/	/	/	U	/	U	/	S	U	U	U	U	U	U	U	U	U	S	U	/	U	/	S
Trisodium Phosphate	/	/	/	S	/	/	M	/	/	/	/	/	/	S	/	/	S	S	S	/	/	S	/	/	S	/	S
Tris Buffer (neutral pH)	U	S	S	S	S	S	S	/	S	S	S	S	S	S	S	S	S	S	S	S	S	S	S	S	S	S	S

S	Satisfactory
M	Moderate attack, may be satisfactory for use in centrifuge depending on length of exposure, speed involved, etc.; suggest testing under actual conditions of use
U	Unsatisfactory, not recommended
/	Performance unknown; suggest testing, using sample to avoid loss of valuable material

Chemical Compatibility Chart

CHEMICAL \ MATERIAL	Aluminum	Anodic Coating for Aluminum	Buna N	Cellulose Acetate Butyrate	Polyurethane Rotor Paint	Composite Carbon Fiber/Epoxy	Delrin™	Ethylene Propylene	Glass	Neoprene	Noryl™	Nylon	PET[1], Polyclear™, Clear Crimp™	Polyallomer	Polycarbonate	Polyester, Glass Thermoset	Polythermide	Polyethylene	Polypropylene	Polysulfone	Polyvinil Chloride	Rulon A™, Teflon™	Silicone Rubber	Stainless Steel	Titanium	Tygon™	Viton™
Triton X/100™	S	S	S	/	S	S	S	/	S	S	S	S	S	S	S	S	S	S	S	S	S	S	S	S	S	S	S
Urea	S	/	U	S	S	S	S	/	/	/	/	S	S	S	M	S	S	S	S	/	S	S	S	M	S	/	S
Hydrogen Peroxide (10%)	U	U	M	S	S	U	U	/	S	S	S	U	S	S	S	M	U	S	S	S	S	S	S	M	S	U	S
Hydrogen Peroxide (3%)	S	M	S	S	S	/	S	/	S	S	S	S	S	S	S	S	M	S	S	S	S	S	S	S	S	S	S
Xylene	S	S	U	S	S	S	M	U	S	U	U	U	U	U	U	M	U	M	U	U	U	S	U	M	S	U	S
Zinc Chloride	U	U	S	S	S	S	U	S	S	S	S	S	S	S	S	S	S	S	S	S	S	S	S	U	S	S	S
Zinc Sulfate	U	S	S	/	S	S	S	S	S	S	S	S	S	S	S	S	S	S	S	S	S	S	S	S	S	S	S
Citric Acid (10%)	M	S	S	M	S	S	M	S	S	S	S	S	S	S	S	S	M	S	S	S	S	S	S	S	S	S	S

S	Satisfactory
M	Moderate attack, may be satisfactory for use in centrifuge depending on length of exposure, speed involved, etc.; suggest testing under actual conditions of use
U	Unsatisfactory, not recommended
/	Performance unknown; suggest testing, using sample to avoid loss of valuable material

[1] Polyethlyeneterephtalate

Table C–1: Chemical Compatibility

NOTICE Chemical resistance data is included only as a guide to product use. Because no organized chemical compatibility data exists for materials under the stress of centrifugation, when in doubt we recommend pretesting sample lots.

Index

A

Acceleration / Deceleration Profiles III–11
Aerosol-tight Rotors III–11
Autoclaving IV–6

B

Basics IV–1
Before Installation III–2

C

Centrifugation III–14
Chemical Compatibility Chart C–1
Cleaning IV–3
Cleaning Intervals IV–1
Close the Centrifuge Door III–11
Components A–5
Control and Configuration II–3

D

Decontamination IV–5
Directives, Standards and Guidelines A–2
Disinfection IV–5

E

Entering Parameters III–11
Explanation of RCF-Value III–12

H

HAEMAFlex 6 Rotor
with Single Blood Bag Buckets (round) B–3
HAEMAFlex 6 Rotor
with Single Blood Bag Buckets with Filter Pack B–4
HAEMAFlex 8 Rotor
with Single Blood Bag Buckets (oval) B–5
HAEMAFlex 8 Rotor
with Single Blood Bag Buckets (round) B–6
HAEMAFlex 8 Rotor
with Single Blood Bag Buckets with Filter Pack B–7
HAEMAFlex 12 Rotor
with Double Blood Bag Buckets B–8
HAEMAFlex 12 Rotor
with Oval Buckets B–9
HAEMAFlex 16 Rotor
with Double Blood Bag Buckets B–10
HAEMAFlex 16 Rotor
with Oval Buckets B–11

I

Ice Formation V-2
Install a Rotor III–1
Intended Use viii
Intended User viii
Items Supplied vii
Items Supplied for Rotors B–1

L

Limitations viii
Loading Blood Bags III–6
Location I–1

M

Mains Connection I–3
Mains Supply A–3
Maintenance and Care IV–1
Maximum Loading III–10
Mechanical Emergency Door Release V-1
Metal Parts IV–2

O

Open the Centrifuge Door III–1
Operation III–1

P

Plastic Parts IV–2
Precautions ix
Preface vii
Preselect Speed / RCF-Value III–11
Preselect Temperature III–12
Preventive Maintenance IV–2
Pre-warm or Pre-cool the Centrifuge III–12
Programs III–13

R

Refrigerants A–3
Rotor and Components Inspection IV–2
Rotor Installation III–3
Rotors B–1
Run Parameters II–3
Runtime Preselection III–12

S

Selection of Adapters III–3
Selection of Rotor and Buckets III–3
Set Up Conditions ix
Shipping I–3
Shipping and Disposal IV–8
Status II–2
Storage I–3
8 x 1000 mL Swinging Bucket Rotor
with Round Buckets B–8
Switch on the Centrifuge III–1
Symbols used in the Manual xiv
Symbols used on the Centrifuge xii

T

Technical Specifications A–1

Transport and Set Up I–1
Transporting I–3
Troubleshooting V-1

U

Use of Tubes and Consumables III–11

W

Water Supply A–4

thermoscientific

MD IVD

Thermo Scientific Sorvall BP 8 / 16 Heavy Duty Watercooled

CE 0123

Thermo Electron LED GmbH
Zweigniederlassung Osterode
Am Kalkberg, 37520 Osterode am Harz
Germany

thermofisher.com/centrifuge

© 2017–2023 Thermo Fisher Scientific Inc. All rights reserved.
All trademarks are the property of Thermo Fisher Scientific Inc. and its subsidiaries unless otherwise indicated.

Delrin, TEFLON, and Viton are registered trademarks of DuPont. Noryl is a registered trademark of SABIC. POLYCLEAR is a registered trademark of Hongye CO., Ltd. Hypaque is a registered trademark of Amersham Health As. RULON A and Tygon are registered trademarks of Saint-Gobain Performance Plastics. Alconox is a registered trademark of Alconox. Ficoll is a registered trademark of GE Healthcare. Haemo-Sol is a registered trademark of Haemo-Sol. Triton is a registered trademark of Union Carbide Corporation. Valox is a registered trademark of General Electric Co. Triton is a registered trademark of Union Carbide Corporation.

Specifications, terms and pricing are subject to change. Not all products are available in all countries. Please consult your local sales representative for details.
Shown pictures within the manual are examples and may differ considering the set parameters and language. Pictures of the user interface within the manual are showing the English version as example.

Australia +61 39757 4300
Austria +43 1 801 40 0
Belgium +32 9 272 54 82
China +800 810 5118, +400 650 5118
France +33 2 2803 2180
Germany national toll free 0800 1 536 376
Germany international +49 6184 90 6000
India toll free +1800 22 8374
India +91 22 6716 2200
Italy +39 02 95059 552
Japan +81 3 5826 1616
Korea +82 2 2023 0600
Netherlands +31 76 579 55 55
New Zealand +64 9 980 6700
Nordic / Baltic / CIS countries +358 10 329 2200
Russia +7 812 703 42 15, +7 495 739 76 41
Singapore +82 2 3420 8700
Spain / Portugal +34 93 223 09 18
Switzerland +41 44 454 12 12
UK / Ireland +44 870 609 9203
USA / Canada +1 866 984 3766
Other Asian Countries +852 3107 7600
Countries not listed +49 6184 90 6000

en

50152621

50152621 is the original instruction manual.

ThermoFisher SCIENTIFIC