Thermo Scientific Matrix MultiChannel Equalizer Pipette with Expandable, Equal Tip Spacing

User Manual

of Thermo Fisher Scientific

Thermo SCIENTIFIC

Thermo Scientific Matrix Equalizer MultiChannel Electronic Pipette with Expandable, Equal Tip Spacing

© 2009 Thermo Fisher Scientific Inc. All rights reserved. All trademarks are the property of Thermo Fisher Scientific Inc. and its subsidiaries. All other trademarks and product names are the intellectual/ industrial property of their respective owners. Licensed under Rainin U.S. Patents 4,905,521 and 5,187,990 and corresponding foreign patents.

North America: 1-800-345-0206 email: matrix.info@thermofisher.com
Europe: +44 161 (0) 4862110 email: matrix.eu.info@thermofisher.com
Asia Pacific: Local representative or matrix.ap.info@thermofisher.com

Content

Congratulations! 1
Before You Begin.....1

A. INTRODUCTION 2

A.1 Thermo Scientific Matrix Equalizer™ Pipette Models 3

B. PIPETTE OVERVIEW.....3

B.1 Components.....3
B.2 General Description 4
B.3 Keypad 5
B.3.1 Operation Keys 5
B.3.2 Programming Keys.....6
B.3.3 Special Function Key 7
B.4 Display 9
B.5 Matrix Equalizer Pipette Specifications 10
B.6 Hazards and Precautions.....11

C. PROGRAMMING AND OPERATION.....12

C.1 Operating the Equalizer Pipette 12
C.2 Programming the Equalizer Pipette 14
C.2.1 Open Programming Mode or “Scratch Pad” (P-0) 14
C.2.2 Entering a Program in Open Programming Mode.....14
C.2.3 Storing a Program.....17
C.2.4 Program Recall 17
C.2.5 Adjusting Pipetting Speed 18
C.2.6 Reviewing the Program.....18
C.3 Programming Examples.....19
C.3.1 Sample Transfers.....19
C.3.2 Incremental Pipetting 19
C.3.3 Serial Dilutions 20
C.3.4 Simple Dilutions 20
C.3.5 Supernatant Collection.....21
C.4 Operating Procedures.....21

D. CALIBRATION 23

D.1 Volume Measurement 23
D.2 Pipette Calibration 24
D.2.1 Factory Calibration Step 24
D.2.2 “EASY” Cal Mode 25
D.2.3 “CALC” Mode 25
D.2.4 CALVIEW 26
D.2.5 CALRESET 27
D.3 Recommendations for Accurate Pipetting 27

E. TROUBLESHOOTING 29

F. MAINTENANCE 31

F.1 Equalizer Pipette Maintenance 33
F.1.1 Equalizer Pipette Disassembly 33
F.1.2 Equalizer Pipette Cleaning and Autoclaving 36
F.1.3 Equalizer Pipette Maintenance and Reassembly 36
F.2 Installing/Replacing Batteries 42
F.3 Charging/Recharging Batteries 44

G. TECHNICAL SERVICE 46

G.1 Instrument Warranty 46
G.2 Recommended Equipment Decontamination Methods 47
G.3 Equipment Decontamination Form 48
G.4 Regulatory Information 49
G.5 On Site Service - Calibration & Maintenance 50
G.6 Factory Service - Calibration, Maintenance, & Repair 51

Congratulations!

You have purchased the state-of-the-art in precision pipetting. The patented Thermo Scientific Matrix Equalizer Pipette is available with variable, equal tip spacing, allowing multiple sample delivery between various tube rack, vial and plate formats.

Ergonomically designed and balanced to reduce fatigue, the Matrix Equalizer pipette functions so intuitively you may need only a quick survey of this manual to use it.

The Matrix Equalizer pipette executes liquid pipetting tasks quickly, accurately, and with less risk of developing repetitive strain injuries (RSI) typically associated with manual pipette use. Laboratory results will become more standardized, while less time is expended on tedious bench procedures.

Before You Begin

Before using the Matrix Equalizer pipette, verify the contents of your package. The package should contain the following items:

1 Matrix Equalizer Pipette
1 Operator's Manual
2 Rechargeable NiMH Batteries
1 AC Power Transformer
1 Warranty Card
1 Accuracy/Precision Data Sheet

If items are missing, contact your Thermo Scientific representative or contact customer service at **800-345-0206**.

Note: *Batteries must be installed and recharged before using the Equalizer pipette. Refer to the following sections in this manual:*

Section F.2, Installing/Replacing Batteries
Section F.3, Charging/Recharging Batteries

A. INTRODUCTION

The revolutionary Thermo Scientific Matrix Equalizer Pipette features a patented tip spacing mechanism to boost laboratory productivity while reducing risk of repetitive stress injuries (RSI). Built with the same design principles incorporated into Thermo Scientific Matrix Electronic Pipettes, the Matrix Equalizer pipette features include:

- Variable tip spacing.
- Expanded memory for storing up to five pipetting programs.
- Each program holds a maximum of 40 steps.
- “Scratch Pad” programming mode enables fast and simple program changes that are not stored into memory.
- Enhanced speed control offers slower aspirating and dispensing of viscous liquids. *Ideal for gel loading!*
- “EASY” CAL, simplifies in-lab calibration verification using distilled water.

The Matrix Equalizer pipette is lightweight and cordless, utilizing rechargeable batteries that can be used during recharge. The pipette also has an automatic shut-off feature to extend battery life.

The Equalizer pipette uses integrated circuit technology to store programming information. It will hold up to 40 steps in a program, with up to 5 programs saved in memory, and 1 scratch pad *(See section C.1.1 Open Programming Mode or “Scratch Pad”)*. The program information is retained in memory, even if the batteries are fully discharged or removed.

The Equalizer pipette uses a “paced dispense” feature that performs repeat pipetting steps while the trigger is depressed.

A.1 Equalizer Pipette Models

Matrix Equalizer multichannel pipettes are available in a number of configurations in both 8 and 12 channnels. An expandable Thermo Scientific Electronic EXP pipette is also available in 6-channel and custom configurations. Models range in volume from 0.5 µl to 1250 µl. Each handle is color-coded with a color ring for easy volume identification *(see section B.5, Handle Specifications)*.

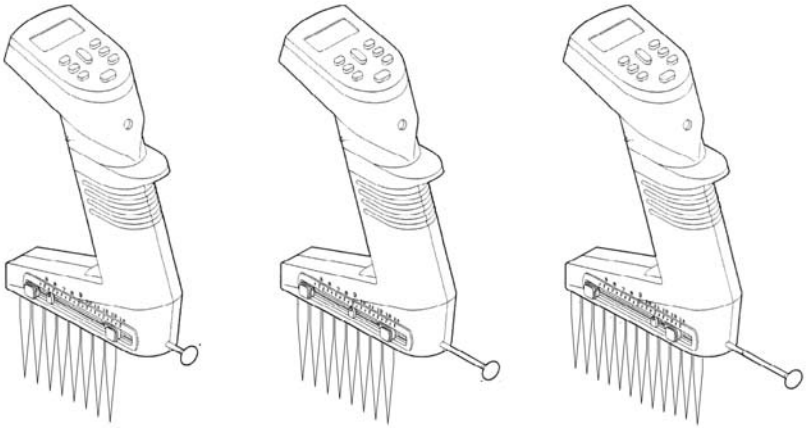

8-channel Equalizer Pipette | 8-channel Equalizer 384 Pipette | 12-channel Equalizer 384 Pipette

B. PIPETTE OVERVIEW

B.1 Components

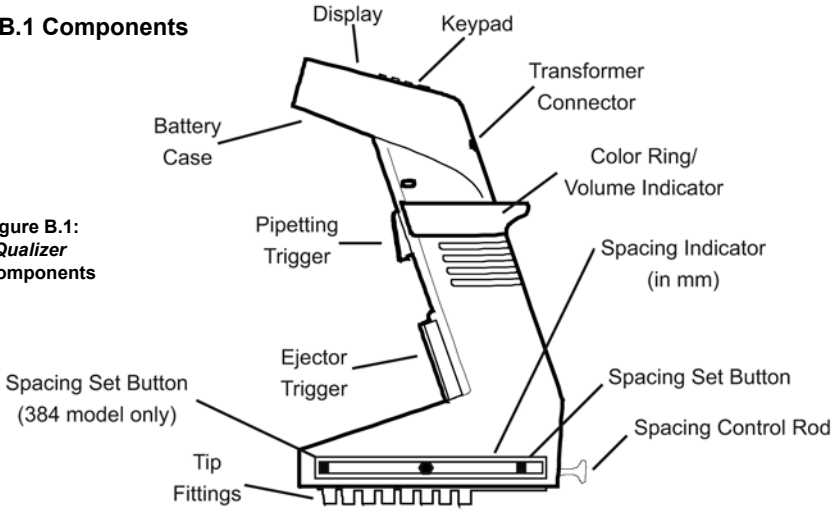

Figure B.1: *eQualizer* Components

B.2 General Description

Keypad. The keypad contains the operation keys that are used in programming the pipetting sequence and volumes. *(See Section B.3, Keypad)*.

Display. The display is an LCD screen that shows the pipetting operation *(fill, dispense, mix, or purge)* and fluid volume for each step in the pipetting program. *(See Section B.4, Display)*.

Battery Case. The battery case contains the rechargeable batteries. Nickel Metal Hydride batteries fully charge in 14-16 hours. The Matrix Equalizer pipette can perform a full day's workload with no need to recharge. Battery life is extended with automatic shut-off after 10 minutes of inactivity. (*See Section F.3, Installing/Replacing Batteries)*.

Pipetting Trigger. The pipetting trigger initiates a program. A single pipetting step is executed by a quick press and release of the trigger. Repeat pipetting is executed by pressing and holding the trigger.

> **Note:** ***At the end of any dispense, the pipette tips should be removed from the fluid before releasing the trigger, to prevent aspiration of fluid.***

Ejector Trigger. The ejector trigger is pressed to eject the tips from the pipette.

Tip Fittings. The tip fittings form an airtight seal with the tips to ensure accuracy while pipetting.

> **Note:** ***Equalizer pipettes are equipped with chemically resistant (PEEK) tip fittings to allow pipetting of acidic solutions without damage to the tip fittings.***

Color-coded Ring. The ring around the pipette handle is color-coded to identify the pipetting volume of the handle (*See Section B.5, Handle Specifications)*.

Transformer Connector. The transformer connector receives the plug from the power transformer for recharging the batteries. The pipette can be used while recharging.

B.3 Keypad

The keypad contains the operation keys, programming keys, and the special function key.

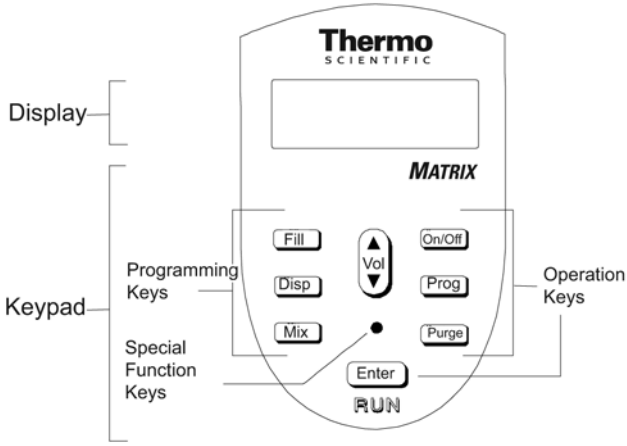

Figure B.3: Equalizer Keypad

B.3.1 Operation Keys

[On/Off] The On/Off key turns the pipette on or off. When the pipette is turned on, it emits a beep tone, flashes “ZERO” on the display, then automatically resets the pistons to zero position. After zeroing, the display shows the first step of the program in the RUN mode.

> **Note:** ***If the pipette is being programmed for the first time, the first step will be the fill operation, with the default fill volume. (See Section C.1, Programming the Equalizer Pipette, for the default settings).***

[Prog] The Program key on the Matrix Equalizer pipette enables you to store up to five separate programs in memory for future recall. Each program can hold up to 40 steps. Programs are stored in reserved program location numbers 1 – 5. Program “0” is used as a “scratch pad” where temporary programs can be written, run, and overwritten easily. Program “0” is considered to be an “open” program. *(See Section C.1, Programming the Equalizer Pipette).*

[Purge] The Purge key enters a purge prompt anytime during a pipetting operation to abort the program. By pressing the Purge key, then pressing the trigger, you can dispense any remaining liquid from the pipette tips and return to the beginning of the program.

The Purge key is also used to enter the purge step into a program.

> **Note:** ***If there is insufficient liquid for a final dispense step, the pipette emits a beep tone and automatically displays the purge prompt.***

Note: ***The RUN mode performs the operation that is displayed on the Equalizer pipette, such as fill, dispense, mix, or purge. When "Run" appears in the display, you can activate the RUN mode by pressing the trigger. At the end of a pipetting sequence, the pipette emits a triple beep tone and returns to the beginning of the program. The pipette remains in RUN mode until you program a new pipetting sequence.***

B.3.2 Programming Keys

[Fill]

[Disp]

[Mix]

The Fill, Dispense, and Mix keys program the pipetting operations. By pressing fill or mix keys, you can enter the programming mode of the Equalizer. The "Run" prompt disappears from the display and the appropriate operation appears with a flashing "Vol" prompt. Fill, dispense, or mix volumes can be programmed by pressing the Volume key. Also, the number of mix cycles can be programmed by pressing the Mix key twice.

Automatic blowout: At the end of a final dispense step, the pipette automatically expels any remaining liquid from the pipette tips with a short burst of air (blowout). The pistons then reverse direction and return to zero position.

> **Note:** ***If you press and hold in the trigger during the final dispense step, the pipette performs the automatic blowout and holds its position until you release the trigger. This delay allows you sufficient time to remove the tips from the liquid to prevent aspiration of liquid, as the pistons return to zero position.***

The Volume key controls the quantity of liquid to be aspirated or dispensed. The volume can be entered when the “Vol” prompt appears.

Pipetting volume can be incremented quickly by continuously depressing the Volume key. The longer you hold the key the greater the incremental speed.

The Volume key can also be used to change pipetting speeds within a stored program or during the execution of a program. (See Section C.1.5, Adjusting Pipetting Speed).

[Enter] The Enter key stores the program in memory. After each step is programmed, the Enter key is pressed once to accept the step. After the final step is programmed, the Enter key is pressed twice to denote the end of the program. The pipette verifies the end of the program with a triple beep tone.

B.3.3 Special Function Key

The Special Function key is the small hole below the Volume key. It can be activated with a pipette tip. By repeatedly pressing the Special Function key, you can display four functions: Pipetting Speed (SPd), Beep Tone (TONE), Paced Dispense Speed (PACE), and Calibration (CAL). To exit the Special Function key at any time, press the Enter key.

SPd Pipetting speed can be adjusted by pressing the Volume key in the special function mode. Five speed settings are available:

Speed Setting	Display
Slow	S
Medium Slow	S ▮
Medium	S ▮ ▮
Medium Fast	S ▮ ▮ ▮
Fast	S ▮ ▮ ▮ F

The current speed setting is always shown at the bottom of the display. These settings can be selected and changed at any time before a program step is executed.

TONE The beep tone signals the completion of one or more steps, or signals a warning:

Single beep tone: end of pipetting step.

Double beep tone: operation or programming key is not active in current mode; insufficient dispense volume, purge required; illegal programming step attempted *(see Section E, Troubleshooting)*.

Triple beep tone: end of pipetting sequence; end of programming sequence.

There are three options to choose from in setting the beep tone. ON1 will have all tones sound at the appropriate times listed above. ON2 will use only double and triple beep tones. OFF will turn off all tones except for the tone to signify an illegal programming step. Press the Special Function key twice to display “TONE” and its current setting. To change the setting, press the Volume key. If the beep tone is set for ON1 or ON2, the beep tone symbol “ •))) ” appears at the bottom of the display.

> **Note:** *For paced dispensing, the beep tone should be set ON1, to prepare you for each dispense step.*

PACE The pace controls the speed of repeat pipetting *(paced dispensing)*, FAST, SLOW or OFF. Press the Special Function key three times to display “PACE” and its current setting. To change the setting, press the Volume key.

Paced Dispense. When using the paced dispense feature, the pipette dispenses the programmed volume at the specified pace *(fast or slow)*. Immediately after each dispense step, the pipette emits a single beep tone *(if beep tone is on)* to prepare you for the next dispense step *(see Section C.5, Operating Procedures)*.

CAL The calibration of the pipette is factory set for distilled water at 20-22 °C. If you are pipetting fluids with significantly different specific gravities or temperatures, use this setting to recalibrate the pipette. *(See Section D, Calibration).*

B.4 Display

The pipette display is a dynamic LCD screen. It displays the current operation, volume prompt *(if entering a program)*, pipetting volume, beep tone symbol *(if the beep tone is on)*, pipetting speed, and program number.

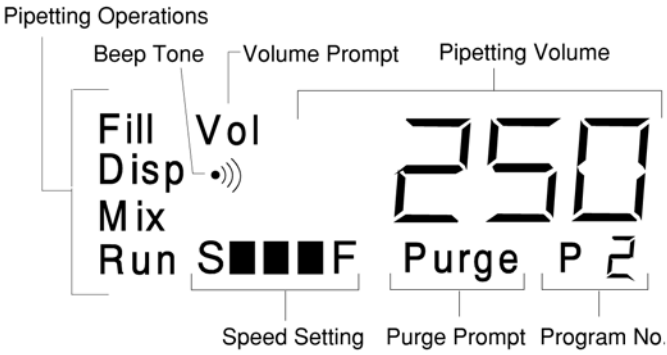

Figure B.4: Equalizer Display

B.5 Equalizer Pipette Specifications

Item No.	Volume	Channel	Volume Range	Color Ring	Accuracy* (±)	Precision** (±)
2032	250 µl	8-Ch	5-250 µl	Blue	2.5%/1.5 µl	0.7%/1.0 µl
2034	1250 µl	8-Ch	15-1250 µl	Green	1.5%/6.0 µl	0.6%/3.0 µl
2139	12.50 µl	8-Ch 384	0.50-12.50 µl	Red	2.5%/0.15 µl	2.0%/0.15 µl
2130	30 µl	8-Ch 384	1.0-30.0 µl	Purple	2.0%/0.30 µl	1.7%/0.30 µl
2131	125.0 µl	8-Ch 384	2.0-125.0 µl	Yellow	2.0%/1.0 µl	1.0%/0.6 µl
2239	12.50 µl	12-Ch 384	0.50-12.50 µl	Red	2.5%/0.15 µl	2.0%/0.15 µl
2230	30 µl	12-Ch 384	1.0-30.0 µl	Purple	2.0%/0.30 µl	1.7%/0.30 µl
2231	125 µl	12-Ch 384	2.0-125.0 µl	Yellow	2.0%/1.0 µl	1.2%/0.8 µl

Table B.5 Equalizer Pipette Specifications

Note: *For Accuracy and Precision, values shown are expressed as a percent (%) deviation or microliter (µl) value. When applied to desired volume, the greater of the two values will always apply.*

*Both values represent the deviation from the mean.
**Percentage values are expressed as the coefficient of variation.
Microliter values are expressed as the standard deviation.

B.6 Hazards and Precautions

There are no known hazards associated with the Equalizer pipette when it is operated in accordance with the instructions in this manual. However, you should be aware of situations that can result in serious injury.

Note: *Do not perform troubleshooting procedures on the internal components unless instructed by Thermo Fisher Scientific Technical Service personnel.*

WARNING! Ensure that the power transformer is connected to a power receptacle that provides voltage and current specified by Thermo Fisher Scientific. Use of an incompatible power receptacle can cause shock and fire hazard.

CAUTION! Use only the power transformer supplied by Thermo Fisher Scientific. Use of an incompatible power transformer can damage the pipette.

CAUTION! Always turn off the power and unplug the power transformer before cleaning the exterior. Fluid seepage can damage internal components.

CAUTION! Do not immerse the unit in liquid. Fluid seepage can damage internal components.

CAUTION! Do not autoclave the entire unit. Extreme heat can damage the display and other electronic components.

Note: *For autoclaving specific portions of the pipette, refer to the Autoclaving Procedures, or call Thermo Fisher Scientific Technical Service for instructions.*

CAUTION! Do not clean the keypad with bleach solution or other solvents. Caustic cleaning solutions can damage the keypad.

CAUTION! Avoid excessive charging of the batteries when the pipette is not in use. Excessive charging shortens the battery life and may damage the batteries.

C. PROGRAMMING AND OPERATION

C.1 Operating the Equalizer Pipette

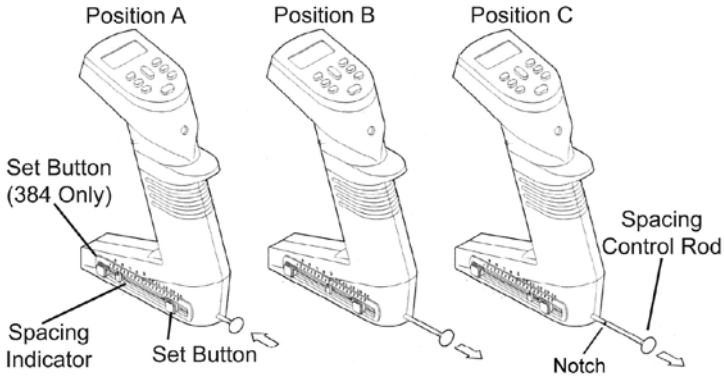

Figue C.1: Equalizer Spacing

The Matrix Equalizer pipette allows the tip-to-tip spacing to change. This allows pipetting into or between vessels of varying center-to-center configurations. The set button(s), spacing indicator and spacing control rod all work together to change the distance between the tips *(see figure C.1).*

To attach tips, the control rod should be in position such that the indicator is set at closed *(position A)*. In the case of the Equalizer 384 pipette *(with two set buttons)*, tips arranged in racks of 384 can be attached when the indicator is set at the 4.5 mm mark. Once tips are attached, follow the steps below to change the pipette to a new tip spacing.

Matrix Equalizer Pipette:

1. Depress the set button using your thumb or finger.

2. While depressing, slide the set button to the desired tip-to-tip spacing marker on the window. Release the set button to lock the spacing.

3. Using the control rod, slide the tips into the desired position. The indicator in the window will also move and will nest into the set button when the desired position is achieved.

Matrix Equalizer 384 Pipette:

1. To set the tip spacing for the vessel with the widest spacing, depress the outer set button *(the button closest to the control rod)* using your finger or thumb.

2. While depressing, slide the set button to the desired tip-to-tip spacing marker on the window. Release the set button to lock the spacing.

3. Check the spacing by using the control rod to slide the tips into position. The spacing indicator in the window will also move and will nest into the set button when the desired position is achieved.

4. For the vessel with the tightest spacing *(from 4.5 mm - the spacing for 384 well plates)*, depress the other set button using your thumb or finger and repeat steps 2 and 3.

   Note: *On 8-Channel Equalizer 384 pipettes, there is a notch (see figure C.1 Position C) located on the control rod that indicates the 9 mm position for easier aligning of the control rod for 96-well plates. By applying pressure to the front side of the control rod, the notch can be by-passed for smoother slide operation. Conversely, when pushing or pulling the control rod past the 9 mm position, if pressure is applied to the back side of the control rod, the notch is more noticeable.*

Important: Do not attempt to slide the set button(s) without depressing. Moving the set button(s) without first disengaging will cause premature wear on the mechanism.

Important: Do not attempt to disassemble the unit. Please contact our Technical Service Department at **800-345-0206** for all service-related issues.

C.2 Programming the Equalizer Pipette

Programming the Equalizer pipette is fast and easy. Pipetting steps and volume are entered in the sequence that they will be performed, then the program is saved to memory. This program will stay in memory *(even if the pipette is turned off, or the battery runs low)* until you change it. Five programs and one scratch pad *(Program 0)*, each capable of holding 40 steps, can be entered and stored in the pipette.

C.2.1 Open Programming Mode or “Scratch Pad” (Program 0)

The Equalizer pipette provides ample program storage for five, 40 step programs. In addition, it offers open programming mode, also known as the “scratch pad.” This mode is identified by “P-0,” which appears in the program section of the display *(refer to the pipette display on page 10).* This feature enables quick changes to pipetting protocols without affecting previously stored programs.

To use the “scratch pad” mode: From the start of any program, simply begin entering a new protocol *(selecting a pipetting operation as described below).* This new protocol can now be used, and will remain active until a stored program is retrieved. “P-0” appears in the program ID section of the display to indicate that the (O)pen programming mode, or “scratch pad” mode, is active.

C.2.2 Entering a Program in Open Programming Mode

To enter a pipetting program:

1. **Turn on pipette.** Press the green [On/Off] key to turn on the pipette. The pipette will beep once and flash “ZERO” on the display while resetting the pistons to zero position. The first step of the current program is displayed.

   Note: *If the pipette is being programmed for the first time, the first step is the fill operation, with the default fill volume displayed (see the following table).*

Volume	Fill Volume	Dispense Volume	Mix Volume
12.50	10.00	10.00	5.00
30.0	25.0	25.0	10.00
125.0	100.0	100.0	50.0
250.0	250.0	50.0	50.0
1250	1250	100	100

Table C.2.2: Default Programming Volumes (in µl)

2. Select pipetting operation. Enter the programming mode by pressing the [Fill] or [Mix] key.

For example, to begin programming with a filling operation, press the [Fill] key. The display shows “Fill” with a flashing “Vol” prompt:

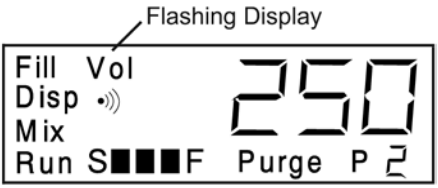

Figure C.2.2a: Flashing Volume Display

Note: *The displayed volume defaults to the last volume programmed for the selected operation, or to the default volume for the pipette, if it is being programmed for the first time.*

Fill. The [Fill] key programs the pipette to aspirate a volume of liquid. A single fill step can be programmed for fluid transfers, or a combination of fill steps can be programmed for dilutions or supernatant collection.

Dispense. The [Disp] key programs the pipette to dispense a volume of liquid. The dispense volume can be the entire fill volume or a smaller increment for repeat pipetting. The dispense volume needs to be programmed only once for repeat pipetting. The pipette will dispense the volume each time the trigger is pressed (*or repeatedly during a paced dispense*) until the fill volume is reached, or until insufficient volume remains.

Mix. The [Mix] key programs the pipette to perform a combination of fills and dispenses. You can program a mix volume or mix cycle (*single fill and dispense*). You can press [Mix] once to program a mix volume, or twice to program a mix cycle. Mix cycles from 2 to 9 are available on the Equalizer pipette. The default setting is three mix cycles.

Some programming considerations for the mix operation:

If the program begins a mix cycle from zero position, it will complete the cycle with an automatic blowout, then display “ZERO.” Press the trigger to return the pistons to zero position.

If the program begins a mix cycle above zero position *(volume is greater than zero)*, the fluid is dispensed, and the mix cycle begins. The mix cycle will end at the same volume it started with. Also, the mix operation will remain in the display so it can be repeated *(useful for serial dilutions*), unless followed by another program step. To end the mix operation, press the [Purge] key, then press the trigger.

Purge. The [Purge] key programs the pipette to purge the fluid. This step can be entered as a program step, or it can be pressed anytime while pipetting to terminate the program and dispense the remaining liquid.

Note: *If the program ends at a volume greater than zero, and the last step is not a mix cycle, the "Purge" prompt automatically appears. Also, the pipette emits a double beep tone to warn you that some fluid remains. Press the trigger to dispense the remaining fluid and return to the beginning of the program.*

Examples of pipetting programs with different mix steps are shown in Section C.3, Programming Examples.

3. **Enter volume.** Enter the desired volume for [Fill], [Disp], or [Mix] by pressing the up ▲ or down ▼ section of the [Vol] key. The longer you hold the key the greater the incremental speed.

Note: *The [Purge] key does not use a volume; therefore, if a purge step has been entered, continue to the next step.*

4. **Confirm programming step.** Press [Enter] to confirm the programming step. The display flashes all of the operation keys to prompt the next programming step:

Figure C.2.2b: Flashing Display

5. **Select next pipetting operation.** Repeat steps 2 through 4 until all programming steps have been entered.

6. **Save program and exit.** When the display flashes all operation keys, press [Enter] to save the program and exit the programming mode. The pipette emits a triple beep tone to signal the end of the programming sequence. The first step in the program is displayed. “Run” is displayed in the lower left corner to indicate that the new program is ready to be run. Go to Section C.2.6 for Reviewing the Program, or Section C.4 for Operating Procedures.

C.2.3 Storing a Program

To create and store programs in the Equalizer pipette:

1. Select the program number by pressing the [Prog] key, then press the [Vol] key until the desired program number (*P1-P5*) is displayed.

2. Press and hold the [Prog] key, while simultaneously pressing the Special Function key to enter the programming mode. The prompt “Prog” will appear on the display.

3. Begin entering your new program *(refer to Section C.2.2, Entering a Program in Open Programming Mode, for instructions)*.

   NOTE: *When programming mode is active, the Speed Setting and Beep Tone symbols will blink.*

   Upon pressing the [Enter] key to save and exit the program mode, the new program will be stored under the selected program number.

The program number will be displayed for two seconds. *(The first step of the newly written program is displayed)*. This program is ready to be run.

C.2.4 Program Recall

To recall a stored program:

1. Press the [Prog] key, then the [Vol] key to select the desired program number.

2. Press the [Enter] key to activate the displayed program.

C.2.5 Adjusting Pipetting Speed

The Matrix Equalizer pipette offers unique speed control programming for Fill, Dispense, Mix, or Purge. Speeds within any of the five stored programs can be independently set and stored as an integral part of the pipetting protocol. Pipetting speed is easily changed at the start of each pipetting function.

To change pipetting speed during the execution of a program:

Press the [Vol] key to select the speed for each pipetting step *(Fill, Dispense, or Mix only)*. If purge is programmed as a step, its speed can also be programmed.

Note: *Purge must be changed in the program.*

This newly set speed will remain active with each function even if the pipette is turned off. Speed settings within any of the five stored programs will also remain in memory with the program functions until changed by the operator.

C.2.6 Reviewing the Program

After programming the pipette, review the programming steps:

1. **Set pipette for RUN mode.** Ensure the pipette is in the RUN mode *("RUN" appears in the lower left corner of the display)*. If the display is flashing all pipetting operations, it is still in the programming mode; press [Enter] to save the program and exit.

2. **Begin program.** Run the program without using pipette tips or aspirating fluid. Press the trigger for each step in the program.

3. **Observe display.** At each step of the program, observe the display. If necessary, re-enter the programming sequence.

   Some helpful hints for reviewing your program:

   - If the program is complex and contains several steps, write the steps on paper before entering the program. Check off each step as you review the program.
   - If the program is intended for paced dispensing, review the program again, with the trigger depressed until the last step. Check the dispense pace to ensure that you can keep up with the dispense steps.

C.3 Programming Examples

Examples of different pipetting sequences are described below, and are ideal for use as training exercises. Press the keys shown in keycaps [ ], then press the [Vol] key until the volume in parentheses ( ) is displayed. At the end of the program, a triple beep tone is sounded. *(see section D.3 Recommendations for Accurate Pipetting for suggestions for better precision and accuracy)*.

C.3.1 Sample Transfers

Example: Fill and dispense 100µl.

Option 1
[Fill] [Vol] (100) [Enter]
[Disp] [Vol] (100) [Enter] [Enter]

Option 2
[Fill] [Vol] (100) [Enter] [Enter]

The second option is a one-step program. Because the program ends at a volume greater than zero, and the last step is not a mix, a “Purge” prompt automatically appears at the end of the fill to dispense the liquid and return to the beginning of the program.

C.3.2 Incremental Pipetting

Example: Fill and dispense 250 µl.

[Fill] [Vol] (250) [Enter]
[Disp] [Vol] (10) [Enter]
[Disp] [Vol] (45) [Enter] [Enter]

Note: *The 10 µl Primer Dispense reduces the percentage of error in incremental dispensing (see section D.3 Recommendations for Accurate Pipetting)*

In this program, only one dispense step needs to be programmed. If any program ends in a dispense step, the pipette repeats the dispense step until the volume is zero, or is less than the programmed dispense volume. If the remaining volume is less than the programmed dispense volume, the pipette displays a “Purge” prompt to discard the remainder. This discarded volume contains the cumulative error of previous pipettings *(see section D.3 Recommendations for Accurate Pipetting for further explanation).*

C.3.3 Serial Dilutions

Example: Transfer 100 µl to the first column of a plate previously filled with reagent. Mix 200 µl for 2 cycles. Transfer 100 µl to the second column and repeat the mix step. Follow this procedure for the rest of the plate.

[Fill] Vol (100) [Enter]
[Mix] Vol (200) [Mix] Vol (2) [Enter] [Enter] [Enter]

That’s the entire program! The mix step always returns to the volume at which it started *(100 µl)*; therefore, the pipette continues the mix step indefinitely, until you press the [Purge] key to end the program. In this example, the mix cycle is programmed for 2 cycles *(default is 3 cycles)*.

C.3.4 Simple Dilutions

Example: Prepare 1:10 dilution with a 10 µl sample volume.

[Fill] Vol (100) [Enter]
[Fill] Vol (20) [Enter]
[Fill] Vol (10) [Enter]
[Purge] [Enter] [Enter]

The first fill volume is for the diluent *(100 µl)*, followed by an air gap *(20 µl)*, and finally by the sample volume *(10 µl)*. The purge step will dispense the total volume.

C.3.5 Supernatant Collection

Example: Aspirate 100 µl from 8 rows of a Microtiter® plate and discard the total volume.

[Fill] ▲▼ Vol (100) [Enter]
[Fill] [Enter]
[Fill] [Enter]
[Fill] [Enter]
[Fill] [Enter]
[Fill] [Enter]
[Fill] [Enter]
[Fill] [Enter]
[Purge] [Enter] [Enter] •))

This program is performed with the 1250 µl Equalizer pipette. All 100 µl fill volumes are collected in the same tips. When completed, the total volume is discarded with the purge step.

C.4 Operating Procedures

After programming the pipette, the display should show the first program step, with the “Run” prompt showing in the lower left corner:

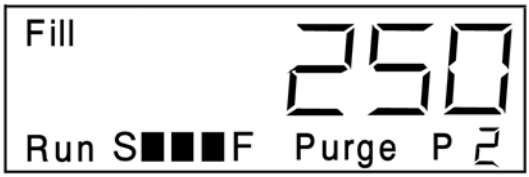

Figure C.4: Run Prompt

The following steps describe a basic program for pipetting reagent into a Microtiter plate. The pipette is programmed as follows:

[Fill] ▲▼ Vol (250) [Enter]
[Disp] ▲▼ Vol (10) [Enter]
[Disp] ▲▼ Vol (30) [Enter] [Enter] •))

Note: *The 10 µl Primer Dispense reduces the percentage of error in incremental dispensing (see section D.3 Recommendations for Accurate Pipetting)*

1. **Attach pipette tips.** When ready to begin pipetting, attach the tips to the pipette.

   Note: *When applying tips, avoid 'banging' or applying excessive force to the tip(s), as this stretches the tip seal and will affect volume. Use Matrix tips which have been specifically designed to match the tip fittings on Matrix pipettes.*

2. **Aspirate liquid.** Immerse the pipette tips into the liquid to be aspirated, then press the trigger to aspirate 250 µl. Submerge the tips about 1/4" below the surface of the liquid.

3. **Dispense primer volume.** Discard the 10 µl primer volume back to the source vessel or into a waste receptacle.

4. **Dispense liquid.** Position the pipette tips over the first column of wells in the Microtiter plate, and press the trigger to dispense 30 µl. At the completion of the dispense step, the pipette emits a single beep tone *(if the beep tone is set to ON1).*

5. **Repeat dispense.** Repeat the previous step for the rest of the columns in the Microtiter plate. At the completion of the eighth dispense, the pipette emits a double beep tone *(if the beep tone is on, otherwise it emits a single beep tone)* and displays the "Purge" prompt. There is insufficient volume for another 30 µl dispense, and the pipette signals for a purge step.

-or-

Paced Dispense. Steps 4 and 5 can also be performed as a paced dispense. Instead of pressing the trigger for each dispense step, press and hold the trigger to automatically dispense each volume. Immediately after each dispense step, the pipette emits a single beep tone *(if the beep tone is on)*, prompting you to prepare for the next dispense step. To stop a paced dispense, release the trigger before the end of the last dispense step.

Note: *For paced dispensing of small volumes, set the pace to SLOW. Ensure that you have fully released the trigger before the end of the last dispense step to prevent an additional, unwanted dispense step.*

6. **Discard remaining liquid.** Position the pipette tips over a waste container and press the trigger to purge the remaining liquid. The pipette emits a triple beep tone to signal the end of the program, then returns to the first step of the program.

7. **Eject tips.** Press the ejector trigger to eject the used pipette tips.

D. CALIBRATION

The Equalizer pipette is factory-calibrated for distilled water at 20 °C. For easy calibration using distilled water, the Equalizer pipette features an “EASY” CAL mode *(see Section D.2.2, “EASY” CAL mode).* When pipetting liquids of significantly different specific gravities or temperatures, however, the Calibration *(CALC)* feature may be used to achieve greater accuracy *(see Section D.2.3, “CALC” mode)*.

To prepare for calibration, ensure the pipette and tips are equilibrated. When calibrating a multichannel pipette, select and pipette with only one channel. Using an analytical balance, first obtain the actual value of the programmed volume at factory calibration. The programmed volume *(Vp)* used is typically the full volume of the pipette *(for example, 200 µl for the 250 µl 8-Channel Equalizer)*, but is not limited to this volume.

D.1 Volume Measurement

To measure the actual value of the programmed volume:

1. Fill the programmed volume *(Vp)*, then dispense the entire volume into a container on the analytical balance.

2. Read the weight on the analytical balance. Repeat this procedure ten times.

   Note: *Use a clean and dry pipette tip with each pipetting cycle. When filling the liquid, immerse the pipette tip approximately ¼ inch (approx. 0.6 cm) below the liquid surface. When dispensing the liquid, touch the side of the container to ensure a complete dispense.*

3. Determine the average weight of the programmed volume and convert it to volume. To convert to volume, correct the weight for specific gravity and temperature.

   If weighing water, use one of the correction factors below:

Temperature	Correction Factor
20 °C - 22.5 °C	1.003
23 °C - 25 °C	1.004

The resulting volume is the corrected actual volume. If the pipette is correctly calibrated, the programmed volume should equal the actual volume *(within the specifications of the pipette)*.

D.2 Pipette Calibration

Equalizer pipette users can calibrate their pipettes with “EASY” CAL mode for distilled water or with “CALC” mode to calibrate other liquids and for temperatures other than room temperature.

D.2.1 Factory Calibration Step

The factory calibration step is needed when calibrating your Equalizer pipette. This is located on the calibration certificate called “Pipette Calibration Report” enclosed in the documention for this pipette. *(See comments on page 1 of Pipette Calibration Report).* View the pipette’s current calibration step by using the CALVIEW mode listed in section D.2.4.

> **Note:** *When resetting the calibration step to a default value, as listed in section D.2.5 CALRESET, the step is set to an average value for all pipettes of its class. This value may differ from the factory-optimized calibration step documented on the “Pipette Calibration Report”. Please use the step listed there for best results. If you cannot locate you documentation that lists the factory calibration step, contact Thermo Fisher Scientific Tech Support at* ***800-345-0206****, and have your pipette’s serial number ready.*

D.2.2 “EASY” Cal Mode

Equalizer pipette users can quickly calibrate their pipette by using the unique “EASY” CAL feature. “EASY” CAL has been developed for fast, easy, in-lab verification and/or calibration using distilled water at room temperature *(20-22.5 °C)*.

Volume	Calibration Point (µl)	Factory Calibration Steps
12.50 µl	10.00 µl	Located on the calibration certificate “Pipette Calibration Report” sheet included in the pipette documentation.
30 µl	25.0 µl	
125.0 µl	100 µl	
250.0 µl	200 µl	
1250 µl	1000 µl	

Table D.2.2: Calibration Specifications

1. Weigh out ten aliquots of distilled water on an analytical balance, using one pipetting channel. The programmed dispense volume must correspond to the calibration point for that pipette *(for example, 200 µl for a 250 µl pipette)*. Refer to Table D.2.2, Calibration Specifications, for proper calibration points.

Note: *Ensure that the distilled water used is at room temperature (20-22.5 °C). An internal correction factor of 1.003 is used by the pipette to convert weight (gm) to volume (ml).*

2. Calculate an average for the ten readings of distilled water obtained from the balance. If the resulting average weight is within your accuracy specifications, no further calibration is required. If the average weight does not meet expected performance, enter the “EASY” CAL mode to quickly re-calibrate the Equalizer pipette.

3. Enter the “EASY” CAL mode by pressing the Special Function key *(using a pipette tip)* until “EASY” flashes, then press the [Enter] key to display the calibration point.

4. Use the [Vol] key to adjust the displayed calibration point until it matches the average weight obtained in step 2. Store this number by pressing the [Enter] key. The new calibration setting is confirmed by the “CAL” and “SET” messages on the display.

5. Verify this new calibration setting by repeating Steps 1 and 2.

D.2.3 “CALC” Mode

To calibrate the pipette:

1. Weigh out ten aliquots of distilled water on an analytical balance, using one pipetting channel. The programmed dispense volume must correspond to the calibration point for that pipette *(for example, 200 µl for a 250 µl pipette)*. Refer to Table D.2.2, Calibration Specifications, for proper calibration points.

Note: *Ensure that the distilled water used is at room temperature (20-22.5 °C).*

2. Calculate display volume of the pipette:

$$D_V = \frac{Vp}{Va} \times C_p$$

Vp = Programmed Volume

Va = Corrected Actual Volume *(corrected for temperature)*

Cp = Calibration Point *(each pipette handle has a unique calibration point, see table D.2.2: Calibration Specifications).*

Dv = Display Volume

3. Enter the CAL mode on the pipette by pressing the Special Function key *(use a pipette tip to press the key)* until “EASY” appears on the display.

4. Press the [Vol] key to display “CALC” *(pressing the [Vol] key again will return you to the “EASY” mode)*.

5. Press the [Enter] key to display the calibration point.

6. Press the [Vol] key to enter the Display Volume *(Dv)* calculated above in step 2.

7. Press the [Enter] key to set the calibration point. The display shows “CAL” then “SET” to confirm the new calibration point, and returns to the current pipetting program.

Example: Calibrate a 1250 µl 8-Channel pipette.
Water temperature = 24 °C
Programmed Volume (Vp) = 1000 µl
Average of Actual Volume = 990 µl
Corrected Actual Volume (Va) = 990 x 1.004 = 994 µl
Calibration Point (Cp) = 1000

$$D_V = \frac{V_p}{V_a} \times C_p$$

$$D_V = \frac{1000\ \mu l}{994\ \mu l} \times 1000$$

$$D_V = 1006$$

D.2.4 CALVIEW

CALVIEW displays the pipetting stroke *(number of steps)* used to reach the calibration point. This value allows you to confirm the calibration during pipetting and after calibration. To activate CALVIEW, enter the CAL mode using the Special Function key. When the calibration point is displayed, press the [Fill] key. The number of steps is displayed. Press any key to exit CALVIEW.

D.2.5 CALRESET

CALRESET allows you to return to a default calibration step. To reset the calibration, enter the CAL mode using the Special Function key. When the calibration point is displayed, press the [Purge] key. The display flashes “FACT,” “CAL,” then “SET” and the pipette resets to the default step. This default setting is an average value for all pipettes of its class. **This value may differ from the factory-optimized calibration step documented on the “Pipette Calibration Report” enclosed in this pipette’s documentation.**

D.3 Recommendations for Accurate Pipetting

Equalizer pipettes are factory calibrated to deliver accurate volumes with distilled water at 20 °C. By using the calibration procedures described above, you can pipette liquids of different specific gravity with a high degree of accuracy and reproducibility. For optimal pipetting results, refer to the following recommendations:

- **Pipette at a constant temperature.** Allow liquids and equipment to equilibrate to ambient temperature. Volume aspiration with air displacement pipettes varies with air pressure, relative humidity and the liquids vapor pressure, all of which are temperature dependent.
- **Attach tips with slow, even pressure.** When applying tips, avoid ‘banging’ or applying excessive force to the tip(s), as this stretches the tip seal and will affect volume. Use Matrix tips, which have been specifically designed to match the tip fittings on Matrix pipettes.
- **Calibrate the pipette for the liquid.** If the liquid has a specific gravity and vapor pressure equivalent to distilled water, calibrate using “EASY” CAL mode. Otherwise, use “CALC” mode.
- **Pre-wet the pipette tip.** Aspirate and dispense a few times before aspirating the liquid to increase humidity within the tip, reducing sample evaporation that results in lower dispense volumes in initial few pipettings. The need to pre-wet increases when working with liquids with high vapor pressure and/or high surface tension.
- **Immerse tips fully.** Tips should be immersed approximately ¼ inch *(approx. 0.6 cm)* below the liquid’s meniscus and away from the container surfaces to avoid aspiration of air and excess droplets clinging to the outside of the tip.
- **Discard a primer volume.** When the motor changes from aspiration to dispense, the percentage of error is greater in the first dispense than in subsequent dispenses.

- **Pause consistently.** It takes a moment for the liquid in the tip to finish moving. Pause with the tip in the liquid for about one second after aspirating the sample to allow the liquid to finish moving into the pipette tip after the pipette stops. Otherwise, the volume will be lower than it should.
- **Aspirate slow, dispense fast.** As a general rule, pipette liquids, especially viscous liquids, at a slower speed to ensure accurate pipetting. Dispense aqueous solutions at faster speeds to expel liquid more accurately.

Note: *Viscous liquids should be dispensed slowly.*

- **Tip touch.** During the dispensing of a liquid, touch the tip against the side of the receiving container to prevent any liquid from remaining on the tip.

- **Discard final dispense.** When accurate dispensing of several increments of liquid are needed, discard the last increment. The cumulative percentage of error from previous increments carries to the last volume. (i.e. The pipette aspirates 100 µl and dispenses 20 µl five times, and if each of the first four dispenses were off by +1.0 µl, then the last dispense is missing 4 µl before you even dispense it).

E. TROUBLESHOOTING

Possible procedural and system problems, as well as recommended solutions. If you cannot resolve the problem, call technical service at **800-345-0206**.

No power to the pipette.

Probable Cause	Recommended Solution
Batteries are incorrectly installed.	Recheck the orientation of the batteries; they should match the diagram in the battery case
Battery Spacer is not in unit or is not in correctly (*Multichannels only with NiMH*).	Ensure that the battery spacer is in place for all models that use Nickel Metal Hydride (*see section F.3.1*).

Double beep tone •))) occurs.

Probable Cause	Recommended Solution
An illegal programming step is being entered, such as programming two fills that exceed the maximum fill volume.	Recheck the programming sequence. Ensure you are not attempting to fill above the maximum fill volume of the pipette, or attempting to dispense more than the total fill volume.

"ERR_1" is displayed. (Signifies one of the following conditions)

Probable Cause	Recommended Solution
Liquid is aspirated into the pipette.	Disassemble and clean the pipette. (See Section F.1 and/or F.2, for pipette cleaning and autoclaving instructions).
Motor is defective or the flex circuit assembly is damaged.	Contact Thermo Fisher Scientific's technical service at 800-345-0206

The motor sounds rough and aspiration is very slow.

Probable Cause	Recommended Solution
The pipette has been set to the slowest speed.	Verify speed setting, the slowest speed setting normally causes the motor to run slowly and louder than usual.
Motor has not been used for an extended period.	Cycle the unit *(fill and dispense)* five to seven times to relube the piston.

After reassembly, the pipette leaks or does not fill liquid.

Probable Cause	Recommended Solution
O-ring was not properly seated.	Disassemble the pipette and reseat the O-ring. *(See Section F.1 and/or F.2 for pipette disassembly/reassembly).*
O-ring was damaged during reassembly.	Replace the O-ring. *(See Section E.2.2, Pipette Cleaning and Autoclaving (Relubrication step) and Section E.2.3, Pipette Reassembly).*
Tubing was disconnected from tip fitting or cylinder.	*Disassemble the pipette and reattach the tube. If tube fits poorly, it may have stretched and needs to be replaced or trimmed of stretched section.*

F. MAINTENANCE

The Equalizer pipette has been specifically designed for serviceability, enabling the user to service instruments with relative ease. Under certain circumstances where on-site service is not feasible, the instrument may need to be returned to Thermo Fisher Scientific for repair *(see Pipette Service, Sections G.2 and G3)*.

The Equalizer pipette requires very little maintenance. The exterior of the pipette can be cleaned periodically with a soft cloth moistened with methyl alcohol. Periodic cleaning of the tip fitting may be necessary using the procedures for maintenance listed below.

In cases where pipettes have been exposed to biohazardous materials, autoclaving internal components may be required. Thermo Fisher Scientific provides the following Preventive Maintenance/Autoclave Kit:

Preventive Maintenance/Autoclave Kit	
Replacement cross tubes	O-ring lubricant
Wooden applicator	O-rings

CAUTION! DO NOT AUTOCLAVE entire unit or clean the keypad with bleach solution or other solvents. Extreme heat can damage the display and other electronic components. Caustic cleaning solutions can damage the keypad or PCBs.

Note: *For autoclaving specific portions of the pipette refer to the autoclaving steps in section F.1.2 for multichannel pipettes; or call technical service, for instructions.*

Note: *Avoid prolonged exposure to ultraviolet light. The handle housing may become discolored or damaged.*

F.1 Equalizer Pipette Maintenance

F.1.1 Equalizer Pipette Disassembly

1. Remove the color ring by gently prying loose one of the edges near the handle trigger.
2. Use a Phillips-head screwdriver to remove all three housing screws.
3. Carefully remove the plastic cover housing and observe the layout of the internal parts.

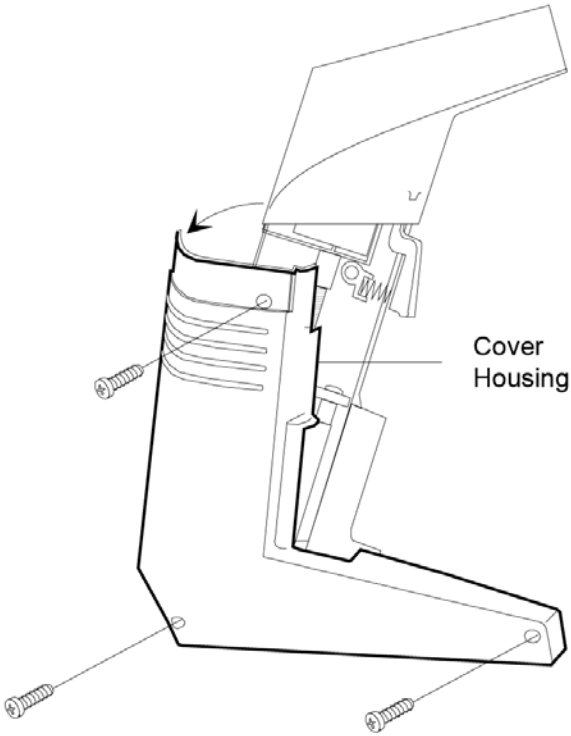

Figure F.1.1a: Removing Cover Housing

4. Remove the ejector comb by sliding it down and forward off the tip fittings (*see Figure F.1.1b)*. Remove the plastic ejector trigger and spring. Next, remove the back plane divider.

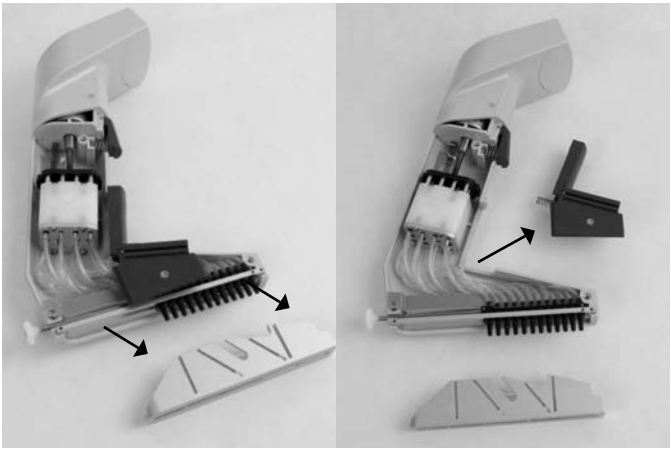

Figure F.1.1b: Removing Ejector Trigger and Ejector Comb

5. Remove the manifold assembly and piston/cylinder assembly by pulling the motor screw down from the motor shaft coupling and out of the main housing. Be careful not to misplace the motor screw washer. Remove the manifold and piston/cylinder assemblies by firmly lifting them out of the main housing support ribs *(see Figure F.1.1c)*.

Figure F.1.1c: Removing Piston/Cylinder and Manifold Assemblies

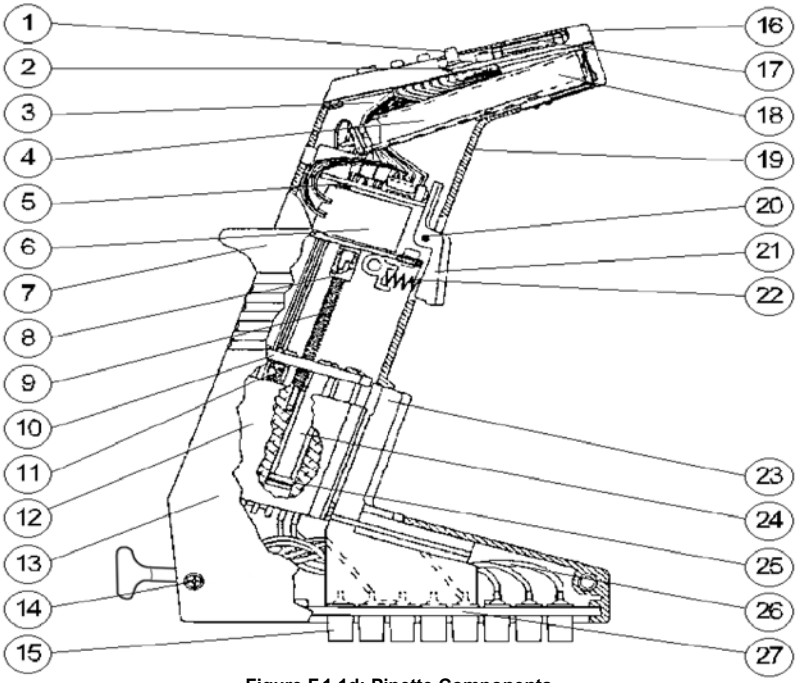

Figure F.1.1d: Pipette Components

Item	Description	Item	Description
1.	Keypad	15.	Tip fitting
2.	Main board	16.	Console cover
3.	Flex circuit	17.	Console display
4.	Battery box	18.	Batteries
5.	Driver board	19.	Main housing
6.	Motor	20.	Trigger hinge pin
7.	Color ring	21.	Handle trigger
8.	Motor coupling	22.	Handle trigger spring
9.	Motor screw	23.	Ejector trigger
10.	Piston backplate	24.	Piston
11.	Photosensor	25.	O-ring
12.	Cylinder	26.	Cross tube
13.	Cover housing	27.	Manifold plate
14.	Housing screw		

F.1.2 Equalizer Pipette Cleaning and Autoclaving

1. Remove the piston assembly from the cylinder.
2. Remove and discard the cross tubes into a biohazardous container.
3. Remove the O-rings *(only if necessary, see section F.1.3 for O-ring Replacement)* and discard them into a biohazardous container.

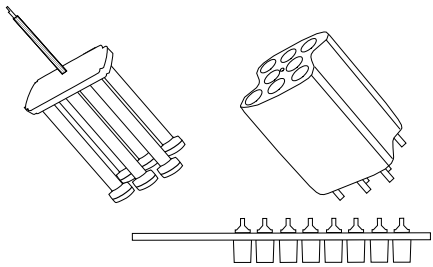

Figure F.1.2: Components to be Autoclaved

4. Place all components (*see Figure F.1.2*) into the autoclave and autoclave at 121 °C for 20 minutes.

F.1.3 Equalizer Pipette Maintenance and Reassembly

Once components are autoclaved and completely dry, use the following procedures to relubricate and reassemble the unit:

O-ring Replacement

The O-rings may require replacement if liquids have been over aspirated. In this case, the O-rings should be removed prior to autoclaving. Spare O-ring packs are available from Thermo Fisher Scientific for all pipette volumes.

1. Remove old O-rings.

- 1250 µl, 250 µl Pipettes: O-rings can be removed from the pistons by squeezing one side of the O-ring and lifting it out of the O-ring groove on the piston. Once removed, the O-rings should be discarded as biohazardous waste.
- 125 µl, 30 µl, 12.5 µl Pipettes: O-rings from these pipettes are located in the cylinder. To remove the O-rings, unscrew the four screws that hold the cylinder cap to the cylinder *(see Figure F.2.3a)*. Once removed, the O-rings should be discarded as biohazardous waste.

2. Install new O-rings.

After the old O-rings have been removed and all components have been autoclaved, the new O-rings may be installed. Before installing the O-rings, apply a thin coat of lubricant to each O-ring, using the O-ring lubricant supplied in the Preventive Maintenance/Autoclave Kit.

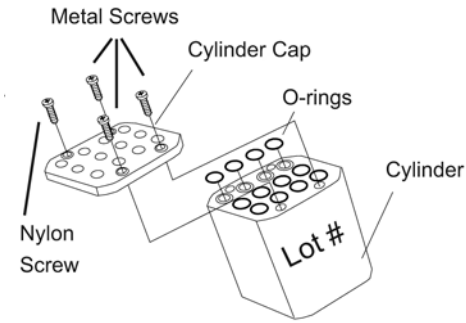

Figure F.1.3a: Removing O-rings

3. Re-lubrication

- 1250 µl and 250 µl Pipettes: Use the wooden applicator and O-ring lubricant supplied in the Preventive Maintenance/Autoclave Kit to apply a thin layer of lubricant approximately 0.5 inches *(approx. 1.3 cm)* down into each piston hole that requires it. Spread the lubricant evenly along the inner wall of each cylinder by using a circular motion with the wooden applicator *(see Figure F.1.3b).*

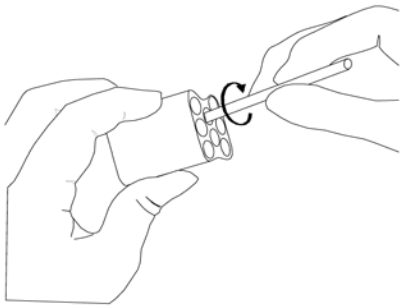

Figure F.1.3b: Re-lubricating 1250 - 250µl Pipettes

• 125 µl, 30 µl, 12.5 µl Pipettes: Spread the lubricant directly onto the pistons, approximately 0.5 inches (approx. 1.3 cm) from the bottom of each piston (see Figure F.1.3c).

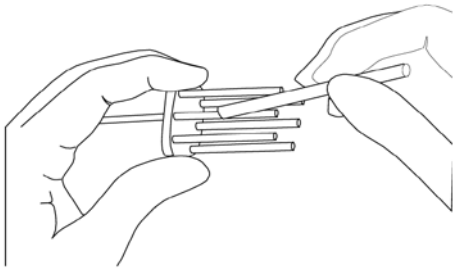

Figure F.1.3c: Re-lubricating 125 - 12.5 µl Pipettes

F.1.4 Equalizer Pipette Reassembly

1. **Reassemble Piston/Cylinder Assembly** Reinsert the piston assembly into the lubricated cylinder. Ensure that the motor screw engages into the hole in the center of the cylinder *(see Figure F.1.4a).*

   NOTE: *To correctly orient the piston and cylinder assembly, ensure that the lot number of the cylinder is facing up and the painted section of the piston backplate is facing down. Also, care should be taken to keep the O-rings from being pinched when inserting the pistons into the cylinder.*

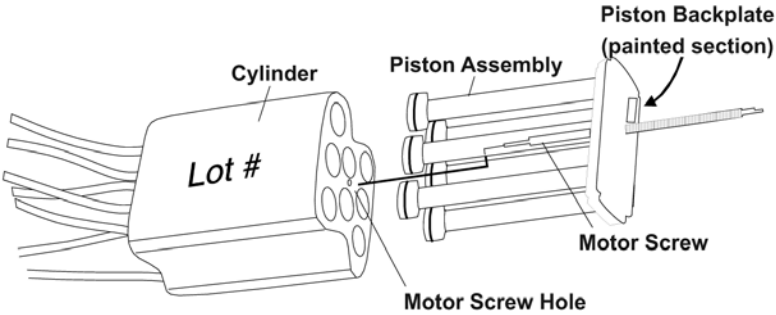

Figure F.1.4a: Reassemble Piston/Cylinder Assembly

2. **Cross Tube Replacement** Connect all the tubes to the manifold assembly except for tube one. Leave tube one unconnected until step 4. Refer to the following figure and table for proper *connection of cross tubes from the tip fittings to the cylinder positions.*

	Tip Fitting Positions											
	1	2	3	4	5	6	7	8	9	10	11	12
12-Channel	1	2	3	4	5	6	7	8	9	10	11	12
8-Channel	1	2	3	4	5	6	7	8				

Table F.1.4: Cylinders

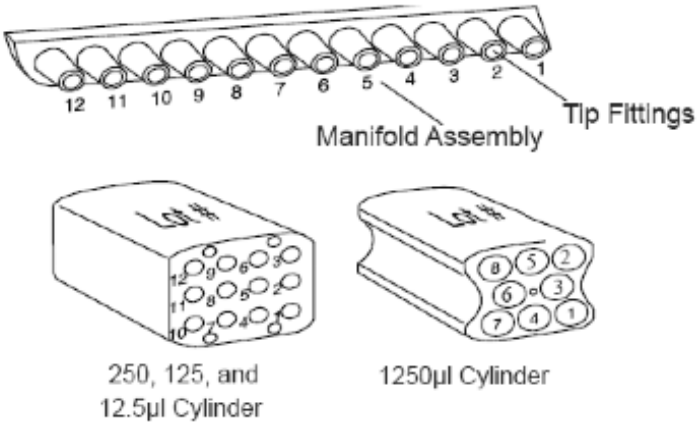

Figure F.1.4b: Cylinder/Cross Tube Positions

Note: *If the cross tube orientation between the cylinder and tip fittings is incorrect, reassembly of the pipette will be impaired.*

3. Installing Piston/Cylinder Assembly

Carefully insert the flat end of the motor screw into the hole of the motor coupling. This can be accomplished by holding the piston/cylinder assembly at a slight angle while inserting the motor screw into the hole of the motor coupling. Slowly spin the motor screw until the flat end of the motor screw is fully engaged into the motor coupling hole *(see Figure F.1.4c)*. The cylinder can now be seated between the plastic ribs in the main housing.

NOTE: *The lot number on the face of the cylinder should be facing toward you and the painted section of the piston backplate should be facing the photosensor. The painted section is used by the photosensor to track the location of the pistons.*

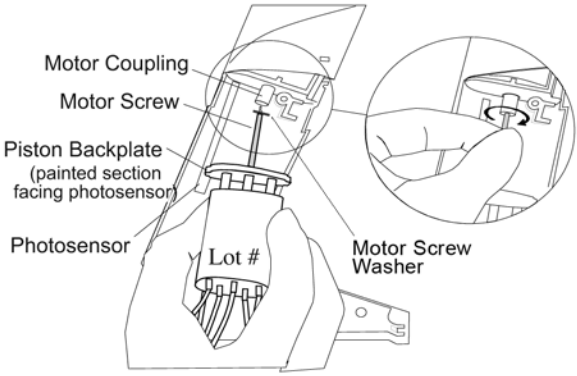

Figure F.1.4c: Installing Piston/Cylinder Assembly

4. **Rotating Manifold Assembly** After installing the piston/cylinder assembly, install the manifold assembly into the main housing. Make sure manifold is in closed position. To keep the tubing free from ejector contact, rotate the manifold plate and tubing one complete turn counterclockwise (*see Figure F.1.4d*). Spin tubing once, then reconnect tube one without twisting (*it is the only tube not twisted*).

   Note: *The Manifold Assembly is comprised of the Manifold Plate and Tip Fittings, and is connected to the Piston/Cylinder Assembly by the tubing.*

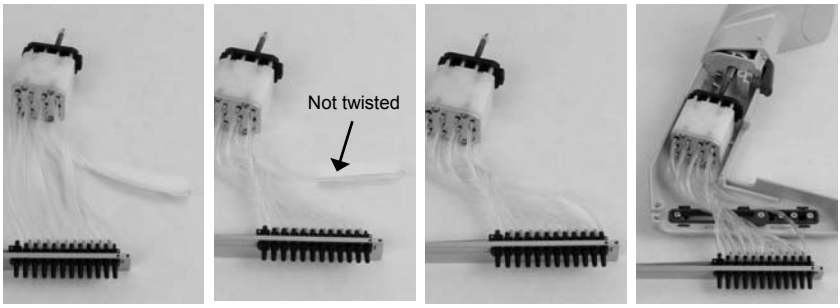

Figure F.1.4d: Rotating Manifold Assembly

5. **Installing Manifold Assembly** Place the back plane divider onto the link assembly, then insert the manifold assembly into the main housing support ribs. Be sure to inset the pin located on the last tip fitting of the manifold assembly into the slot of the spacing indicator arm. Use a dowel or screwdriver to move the tubing away from edges and points of contact between the main housing and housing cover.

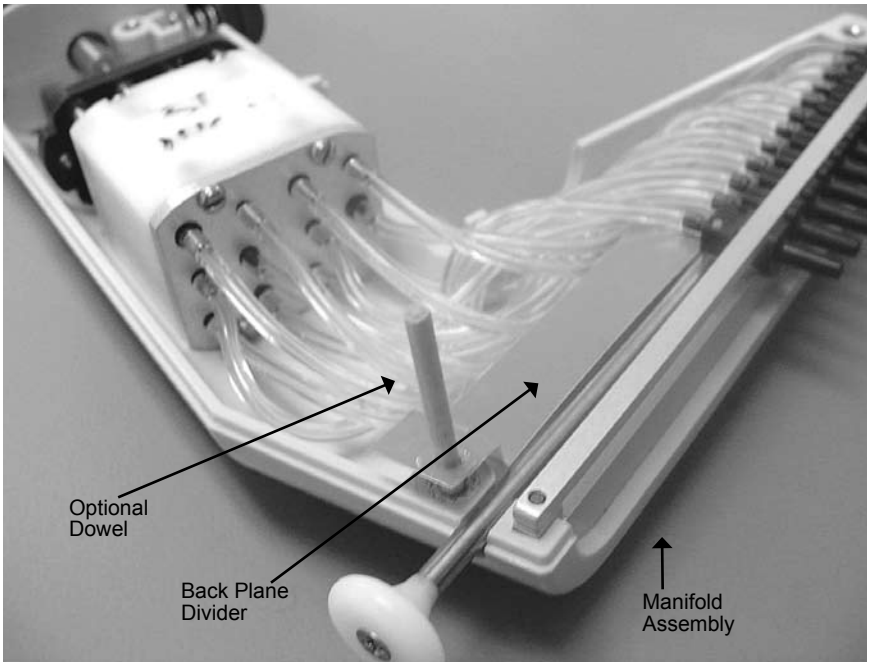

Figure F.1.4e: Installing Manifold Assembly

Note: *Use a dowel to line up the screw hole of the main housing with the back plane divider. This will help with reassembly of the main housing and housing cover.*

6. **Inserting Ejector Trigger** Place the end of the ejector spring against the plastic stop and compress the spring while positioning the ejector trigger onto the ejector trigger rail.

NOTE: *Be careful not to pinch the cross tubes when inserting the ejector trigger.*

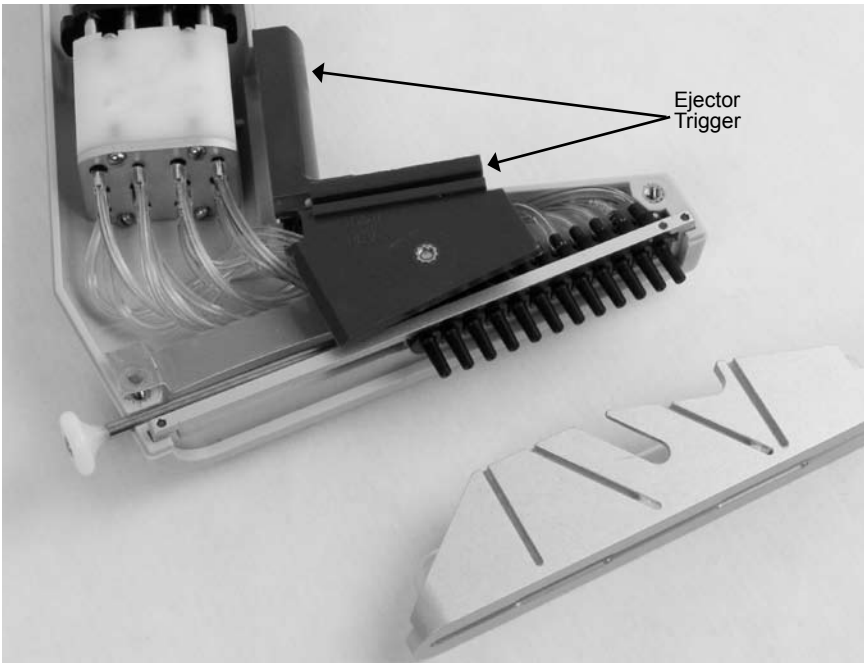

Figure F.1.4f: Inserting Ejector Trigger

7. **Replacing Ejector Comb** Slide the ejector comb over the tip fittings with the slots on the back of the comb exposed *(the ribs on the ejector trigger should mate with the slots on the aluminum ejector comb - see Figure F.1.3g).*

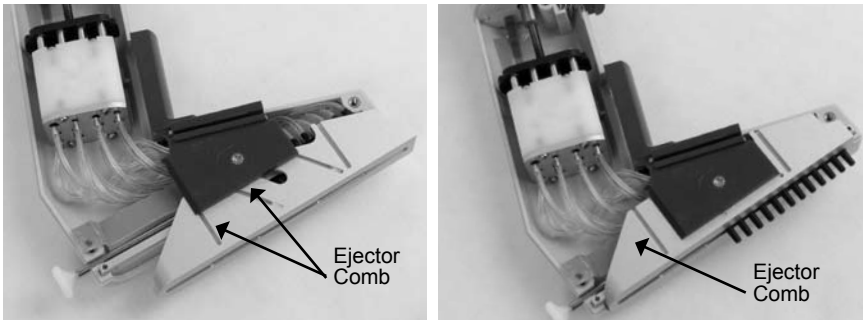

Figure F.1.4g: Replacing Ejector Comb

8. **Replacing the Housing Cover** Line up the screw hole of the back plane divider with the main housing *(using the small dowel works best)* and attach the housing cover. Place the cover housing onto the main housing and fasten the three screws.

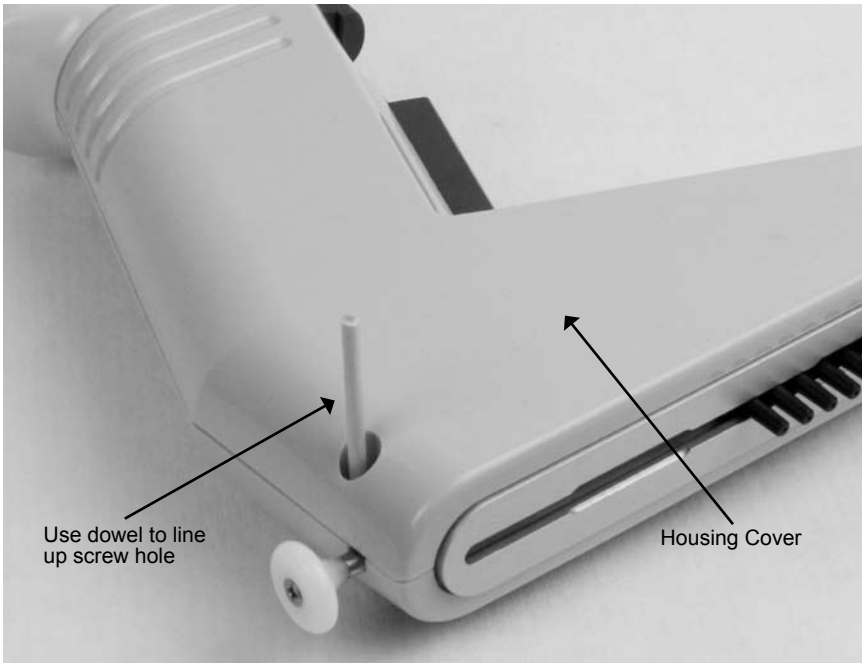

Figure F.1.4h: Replacing the Housing Cover

9. **Test Pipette** Test the pipette for smooth operation *(repeat steps 4-9 as necessary).*

10. **Replace Color Ring** Re-attach the color ring. The pipette is now ready for use.

F.2 Installing/Replacing Batteries

The Equalizer pipette comes with rechargeable Nickel Metal Hydride (NiMH) batteries. Under normal use, the batteries can be recharged approximately 400-500 times. When they can no longer hold their charge, the batteries must be replaced. Replacement batteries can be purchased through the Thermo Fisher Scientific Customer Service Dept. The pipette may also be returned to Thermo Fisher Scientific for battery replacement.

Replacement batteries:

8 and 12 channels	2 NiMH	Part #: 6092

Note: *When replacing batteries, ensure the pipette is turned off before removing the battery case.*

The Nickel Metal Hydride batteries are packaged separately. Install the batteries and recharge them for 14-16 hours. Use the following procedure to install the batteries, then continue to Section F.3, Recharging Batteries.

1. **Remove battery case.** Position your thumb over the thumb grips (*see Figure F.2.1a*) and brace your fingers against the front of the keypad. Apply firm pressure to the panel with the thumb grips to release the latch.

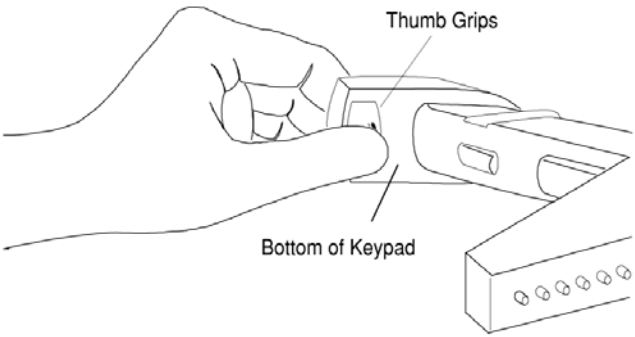

Figure F.2.1a: Removing Battery Case

1. **Remove battery case.** Position your thumb over the thumb grips *(see Figure F.3.1Ba)* and brace your fingers against the front of the keypad. Apply firm pressure to the panel with the thumb grips to release the latch.

2. **Remove batteries.** Press a pipette tip against either battery through the slot in the bottom of the battery case to remove the batteries *(see Figure F.3.1Bb)*.

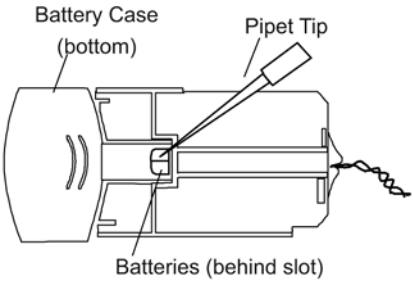

Figure F.2.1b: Removing the batteries

3. **Install new batteries.** Insert the spacer into the bottom of the battery box *(as shown in Figure F.3.1Bc).* Insert new batteries by placing the positive end into the battery case first, then the negative end in place over the spacer *(an exploded view of the assembly is shown in Figure F.3.1Bc, or the diagram in the battery case).* Ensure that the batteries are correctly oriented.

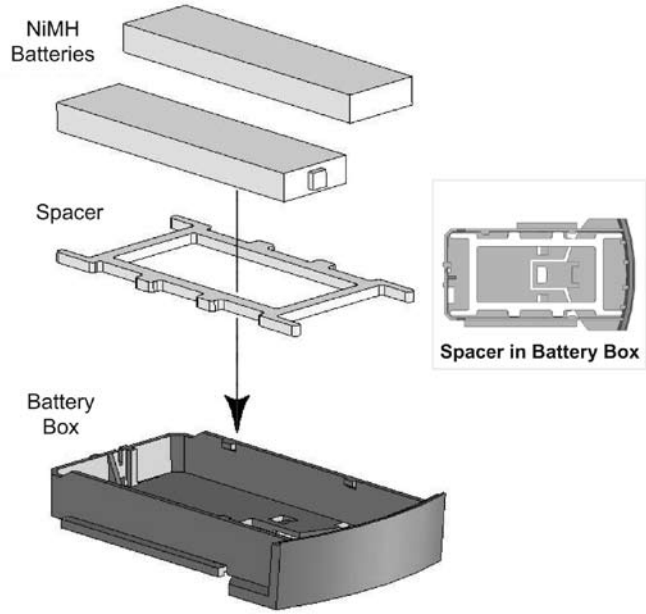

Figure F.2.1c: Installing NiMH Batteries

F.3 Charging/Recharging Batteries

The Equalizer pipette uses two Nickel Metal Hydride (NiMH) rechargeable batteries, located in a battery case under the keypad. The batteries are charged in the pipette by using the power transformer included in the package. You can operate the pipette while it is recharging, or you can operate it solely with the power transformer (without batteries). The batteries can be recharged approximately 400-500 times. To extend battery life, the pipette will turn off automatically if it is not used within ten minutes.

1. **Attach transformer.** Attach the cable end of the transformer into the pipette. The plug receptacle is above the color ring. Plug the transformer into the electrical outlet.

2. **Recharge batteries.** Recharge batteries for 14-16 hours to ensure a full charge. After the batteries have been recharged, unplug the pipette from the transformer.

   Note: *Batteries hold their maximum charge if they are fully discharged before recharging again. However, overnight recharging is acceptable if the pipette is in normal use during the day.*

CAUTION! Avoid excessive charging of the batteries when the pipette is not in use. Excessive charge to the batteries will shorten the battery life and may damage the batteries.

G. TECHNICAL SERVICE

G.1 Instrument Warranty

This instrument is warranted to the original purchaser by Thermo Fisher Scientific to be free of defects in materials or workmanship for a period of 12 months from the date of purchase, providing that is has been operated according to the instructions, not abused or misused, that the serial number has not been removed, and that the instrument has not been disassembled, other than for procedures for normal maintenance. No other warranty is expressed or implied, including the warranty of merchantability.

Should a unit need to be returned, the purchaser must pay insurance and shipping charges. Thermo Fisher will assume the cost of returning the repaired unit to the purchaser. This product packaging is capable of withstanding normal shipping hazards.

Contact Thermo Fisher Technical Service for recommended equipment decontamination methods (*see also section G.4*), or to obtain repairs or replacements within the term of the above warranty at **800-345-0206**, fax: **603-577-7682.**

For Europe and Asia locations, please visit www.thermo.com/matrix.

G.2 Recommended Equipment Decontamination Methods

The following table lists the proper decontamination procedures for returning Matrix Electronic pipettes to Thermo Fisher Scientific for service. Contact customer service at 800-345-0206 for a current equipment decontamination verification form.

Product/Component	**Heat at 65 °C/ 10 Hr.**	**70%/30% IPA/Water**	**10% Bleach**	**Ethylene Oxide**	**Autoclave 121 °C/ 15 min.**
Multichannel Pipettes					
Pipette Exterior	YES	Wipe	Wipe	YES	NO
Piston/Cylinder Assembly	YES	YES	NO	YES	YES
Tip Manifold	YES	YES	NO	YES	YES
Battery	NO	Wipe	NO	NO	NO
Power Supply	NO	Wipe	NO	NO	NO
Pipette Exterior	NO	Wipe	Wipe	NO	NO
Single Channel Electronic Pipettes					
Pipette w/Battery Removed	Yes	Wipe	Wipe	YES	NO
Lower cylinder	YES	YES	YES	YES	YES
Piston (do not remove)	YES	YES	NO	YES	NO
Power Supply	NO	Wipe	NO	NO	NO

WARNING: Do not expose batteries to temperatures above 60 °C.

Expert Pipette Service

Trusted Service

Certified technicians calibrate and repair Thermo Scientific Matrix pipettes as well as most other pipette brands and models. With more than 20 years experience manufacturing and servicing pipettes, we offer a broad range of services to fit every need: basic calibrations, preventive maintenance and repair services.

Streamlined Process

Specially designed pre-addressed pipette shipping boxes provide the ultimate in convenience with a single documentation form to select service options and certify proper decontamination.

Free shipping via FedEx ensures pipettes arrive at our facility quickly, reducing the time away from your lab. Contact your sales representative or call 800-345-0206 to have these pre-paid pipette shipping boxes delivered right to your door.

Accuracy & Precision

Every pipette is verified on a NIST-traceable gravimetric balance at two volumes.

If you require “as received” performance data or ISO-compliant testing protocols, we will gladly provide custom calibration services upon request.

On-site Pipette Service Options

Services include:

- Physical pipette inspection
- Leak test
- Replacement of seal and O-ring, as needed
- Gravimetric performance validation using NIST-traceable balance
- Performance validation of five aliquots at two volumes
- Calibration adjustment, as needed
- Choice of validation sheet or CD containing results of performance validation

Validation

If a pipette fails validation on-site, we will offer to repair it at our facility and, if necessary, deal with the original manufacturer to ensure any major repairs are completed properly.

Service and Support

Our support specialists work in partnership with you to keep your pipettes performing at their peak. We understand how vital these instruments are to your success and take pride in setting the industry standard through service excellence.

Safety Testing of our Products

Thermo Fisher Matrix Equalizer Pipettes have passed the required safety tests for electrical products for the approvals and marks mentioned.

Approval mark	Directive	Standard	Transformer Item #
CE Europe	73/23/EEC Low Voltage	EN61010-1:1993 Safety regulations	6099, 6096, 1096, 1099, 9068
	89/336/EEC Electromagnetic compatibility	EN55022 / EN55011-1 Emissions EN50082-1:1992 Immunity	
Safety tested Production monitored TÜV PRODUCT SERVICE NRTL C US		EN60825	6098, 1098/1097, 9068
PSE	Law No.234, Electical Appliance and Material Safety Law, Japanese Ministry of Economy, Trade and Industry.	DENAN	6098, 1098/1097, 9068

INDEX

A
Autoclaving 35
Automatic blowout 6,15
B
Batteries, Charging (NiMH) 45
Batteries, Installation (NiMH) 43
Battery Case 4,44
C
CAL 8
“CALC” Mode
Calibration (Procedures) 23-28
Calibration (“CALC” Mode) 25
Calibration (“EASY” Cal) 24
Calibration (Specifications) 24
CALRESET 27
CALVIEW 26
Color Ring 4
D
Decontamination Form 48
Decontamination Methods 47
Default Programming Volumes 14
Disp Key 6
Dispense 15
Display 4,9
E
Ejector Trigger 4
“EASY” Cal Mode 24
Enter Key 7
F
Factory Calibration Step 24
Fill 15
Fill Key 6
H
Hazards and Precautions 11
K
Keypad 5
L
Lubrication 36
M
Maintenance 31
Maintenance Procedures 31-45
Mix 15
Mix Key 6
O
On/Off Key 5
Open Programming Mode 14
Operation Keys 5
P
PACE 8
Paced Dispense 8,22
Pipetting Trigger 4
Prog Key 5
Program (Examples) 19-21
Program (Recall) 17
Program (Storing) 17
Program Keys 6
Purge 16
Purge Key 6
R
RUN mode 6
S
Scratch Pad (Program 0) 14
SPd 9
Special Function Key 7
Speed Adjustment 18
T
Technical Service (In Factory) 51
Technical Service (On Site) 50
Tip Fittings 4
TONE 7
Transformer Connector 4
Troubleshooting 29-30
V
Vol Key 7
Volume Range(s) 10
W
Warranty 46

Thermo Fisher Scientific, Inc.
81 Wyman Street
P.O. Box 9046
Waltham, Massachusetts 02454-9046
United States

Thermo Fisher Scientific
Matrix Liquid Handling Products
22 Friars Drive
Hudson, New Hampshire 03051
United States

Technical Support:
North America
Tel: 800.345.0206
Email: ushud-technicalservices@thermofisher.com
Hours of Operation: 8:00 AM to 5:00 PM ET

Europe
Tel: +44(0) 161 486 2112
Email: matrixtechcorp.eu.service@thermofisher.com
Hours of Operation: 08:30 to 17:00 GMT

25403 Rev E

Thermo
SCIENTIFIC